Resolution 2004-8

Mendon City Development Standards and Specifications

Prepared by

J-U-B Engineers Inc.

Engineers • Surveyors • Planners

Logan, Utah

August 12, 2004

Mayor: Sydney K Larsen

City Recorder: Paul L Russell

DIVISION 1

GENERAL REQUIREMENTS

Section 1.01 PURPOSE OF DOCUMENTS:

The purpose of these Standard Specifications and Standard Drawings is to govern any work done or improvements installed within Public right-of-ways or across easements. Developers/Contractors should thoroughly read and understand these specifications and standards before constructing public improvements. At the time a sewer system is installed for Mendon City, all references to sewer requirements in this document will be in effect. These requirements will then be subject to review and update.

The Developer/Contractor shall contact Mendon City at 95 N Main, Mendon, UT 84325 for all matters dealing with construction work within a City right-of-way or with any work connecting onto a City utility. SPECIAL PERMITS AND BONDING ARE REQUIRED FOR ALL SUCH WORK.

Section 1.02 PERMIT, FEES AND BONDING REQUIRED:

It shall be unlawful to do any construction, excavation work on any street, curb, gutter, sidewalk, sewer line, water line, pressure irrigation line, storm drain or other infra-structure addition or improvement in the City of Mendon without a Public Works' permit from the City to do so. The City of Mendon and all utility companies are bound by these standard specifications. No work shall be started until a permit is secured. In order to obtain a Public Work's Permit, the Developer's/Contractor's authorized signature is required. If a contract to do such work for the City has been finalized, the contract fulfills the permit requirement. These requirements are not for emergency work.

Sub-section A. All Public Works' permit applications shall include:

- Start and completion dates of the project.
- The exact address or location of the work to be done.
- The type of work to be done.
- A request to locate water and sewer lines, notification 48 hours previous to start date of work.
- A request for all utility companies to be contacted through Blue Stakes 1-800-662-4111.

Sub-section B. Before a permit is issued, a permit fee and an inspection fee shall be paid to the City. These fees will be set by Council resolution. Fees shall be assessed on the following items:

- Water Lateral Installation Inspection
- Re-inspection (When an inspection has been requested, the inspection is performed and the work is not complete, a re-inspection fee shall be assessed.)
- Bond

All public improvement projects done for Public Works shall be bonded. Each contractor doing work in the City is required to maintain a $500.00 bond with the City. Bond requirements are to guarantee the following:

(1) Construction work is completed.
(2) Final inspection is conducted.
(3) Repairs and/or replacement of required public improvements are finished and accepted.

The bonds shall be in the form of an irrevocable letter of credit from a bank, a bond from a surety company, or a cash bond paid directly to the City. The City shall approve all bonds submitted. No bond shall be released until all improvements are completed and accepted by the City.

Section 1.03 CONTRACTOR AND CONSTRUCTION PLAN APPROVAL:

Before a Contractor performs any work within the City, the City shall approve the Contractor. Approval is granted for a period of one (1) year upon submission of the following:

A current Utah State Contractor's License. Work will be restricted to that authorized by the license.

Proof of comprehensive general liability insurance. Bodily injury insurance will be in an amount of not less than three hundred thousand dollars ($300,000.00) for any one occurrence. Property damage insurance will be in an amount of not less than two hundred thousand dollars ($200,000.00) for any one occurrence and shall include

underground exposure. Combined liability insurance will be in an amount of not less than five hundred thousand dollars ($500,000.00) for any one occurrence.

A five hundred dollar ($500.00) performance bond owing to the City, that will be in effect for a period of one (1) year or one (1) year after the completion of work performed by the contractor, whichever is greater.

The Public Works Representative/Engineer shall approve construction plans and cut sheets before any work begins. Developers/Contractors proceeding with work without such approvals shall have the project shut down until such approvals are obtained. Repeated offenses may result in the Contractor loosing its pre-qualification to perform work in the City.

Section 1.04 PRE-CONSTRUCTION CONFERENCE:

A pre-construction meeting with the Developer and the Contractor(s) involved in the subdivision construction shall be held with the Public Works Representative/Engineer prior to commencement of any work. The location of the meeting shall be at the Mendon City Center, 95 N Main, Mendon, Utah 84325. The following items shall be furnished at the meeting:

A. A detailed outline showing the sequences of construction of principle items of work. The outline shall show the beginning and ending dates of the major items of work on the Project.

B. A list of names, titles, addresses, and telephone numbers of the Developer/Contractor's responsible personnel, indicating those who may be reached outside normal working hours.

C. A list of Sub-Contractors and Materials Suppliers to be involved with the project and the items of work they are going to perform or furnish materials for. The City will notify the Developer/Contractor of any concerns or pre-qualification deficiencies of the companies they plan to use.

Other items may be discussed at this pre-construction conference as determined by the Public Works Representative/Engineer. Official minutes of this meeting as prepared by the Public Works Representative/Engineer shall become part of the project file for the project.

Section 1.05 TIMELY COMPLIANCE WITH THE ISSUED PERMIT:

The Developer/Contractor shall perform in accordance with the terms of the permit and the Standard Specifications and Standard Drawings in effect at the date of the permit. The work shall be done in a timely manner. Time limits may be a condition of the permit and may be shortened because of safety concerns. Permits may be suspended if compliance is not met.

Sub-section A. Inspections:

All work covered by a Public Works' permit shall be inspected by the Public Works Representative prior to the following:

(1) Backfilling and compacting.
(2) Placing concrete and asphalt
(3) Placing any underground piping
(4) Making any connection into a city utility line
(5) Other work done in a public right of way.

Public Works shall also be notified prior to starting any Public Works project.

Sub-section B. <u>Notification of Needed Inspections:</u>

Inspection performed during regular working hours requires at least four (4) hours' notification.

Inspections needed after 4:00 p.m., require notification be given by 1:00 p.m. on the day of the inspection.

Inspections needed on the weekend, require that notification be given by 1:00 p.m. on the preceding Friday.

A charge shall be assessed for inspection call backs.

Sub-section C. Responsibility of the Developer:

The developer is responsible for the complete development, including construction of the entire subdivision, until it is finalized and accepted by the City.

Sub-section D. Definition of "Public Works Representative/Engineer":

The term "Public Works Representative/Engineer" as used in these specifications refers to the Public Works Director, Public Works Inspector, City Engineer, Public Works staff and others as designated by the Public Works Director.

Sub-section E. Conflict:

These Standard Specifications and Standard Drawings are the minimum requirements of the City of Mendon. In the event that any provisions herein conflict with general industrial standards, or with other requirements specified by the City, the more stringent of the standards will apply.

Section 1.06 ELECTRONIC AND RECORD DRAWINGS:

When the Developer's Engineer has the capability, plat and improvement drawings shall be furnished electronically in MicroStation Format (.dgn), AutoCAD format (.dwg) or Data Exchange Format (.dxf). These electronic files shall be provided to the City after final approval but before recording of the Plat.

After completion of all public works improvements the Developer shall provide the City with a set of sepia (reproducible) "record drawings" which have been corrected to show the constructed improvements. Final payment from the bond shall not be made until these records are received.

Section 1.07 TEMPORARY SERVICES:

Any temporary services and utilities such as telephone, electrical, water toilet facilities, etc., shall be the responsibility of the Developer/Contractor.

Section 1.08 CODES AND STANDARDS:

Where codes and standards are referred to they shall be current, approved copies. It shall be the duty of the supplier of any material on this work to submit evidence, if requested, that its material is in compliance with the applicable codes and standards.

Section 1.09 STATE AND LOCAL LAWS:

The Developer/Contractor shall conform to all applicable state and local laws in carrying out its obligations under the Contract.

This shall include, but is not limited to, compliance by the Developer/Contractor with the requirements of Chapter 30, of Title 34, of the Utah Code Annotated, 1953 as Amended. If the provisions of Section 34-30-1, of the Utah Code Annotated, 1953 as amended, are not complied with, this Contract shall be void.

Section 1.10 COMPLIANCE WITH GOVERNMENTAL REGULATIONS:

The Developer/Contractor's personnel, equipment, and operations shall comply fully with all applicable standards, regulations, and requirements of existing Federal, Utah State, and Local governmental agencies. This shall include, but not necessarily be limited to, the following:

Sub-section A. United States Occupational Safety and Health Administration Regulations:

Title 29 of the Code of Federal Regulations, Part 1926 (29 CFR Part 1926), Safety and Health Regulations for Construction.

Sub-section B. Utah State Industrial Commission Regulations:

The Utah Occupational Safety and Health Act (1973) and Employer-Employee Safe Practices for Excavations and Trenching Operations (Jan. 1, 1974), as published by the Utah State Industrial Commission, including any and all amendments or revisions effective prior to performance of the work.

Sub-section C. City Ordinances:

The Developer/Contractor shall be required to comply with all Mendon City Ordinances.

Sub-section D. UDOT Requirements:

When crossing or working within Utah Department of Transportation rights-of-way the Developer/Contractor shall be responsible to obtain all necessary permits and comply with all appropriate UDOT regulations including applicable sections in "State of Utah Standard Specifications for Road and Bridge Construction," latest edition.

Sub-section E. Permits:

The Developer/Contractor is responsible to obtain all required business licenses and building permits applicable to this project. Developer/Contractor shall be subject to the conditions of all permits and agreements between the Owner and the permitting agencies. See Division 14, Rights-of-Way.

Section 1.11 FEDERAL, STATE, AND LOCAL INSPECTING AGENCIES:

The site of construction is to be open at all reasonable times and places for periodic observation by accredited representatives of the Federal, State, and local agencies who have regulatory or supervisory authority over any part of the work proposed or regulated thereto.

Section 1.12 PUBLIC SAFETY AND CONVENIENCE:

The convenience of the general public and the protection of persons and property is of prime importance and shall be provided for by the Developer/Contractor during this project. The Developer/Contractor shall use every reasonable precaution to safeguard persons and property. Failure of the Owner or the Public Works Representative/Engineer to notify the Developer/Contractor of any deficiencies in providing for public safety and convenience shall not relieve the Developer/Contractor from its responsibility. The Developer/Contractor shall be required to comply with the requirements of the Manual on **Uniform Traffic Control Devices (MUTCD).**

Sub-section A. Compliance with Rules and Regulations:

The Developer/Contractor shall comply with all rules and regulations of the City, County, and State authorities regarding the closing of public streets, or highways, to the use of public traffic. If conditions justify, the Public Works Representative/Engineer may authorize the Developer/Contractor to close general traffic to not more than one (1) city block at any given time. No such closure shall be made without authorization of the Public Works Representative/Engineer. Closure of streets or highways shall be in conformance with the **(MUTCD).**

Sub-section B. Road Closures and Obstructions:

No road shall be closed by the Developer/Contractor to the public except by express permission of the Public Works Representative/Engineer. The Developer/Contractor shall, at all times, conduct its work so as to insure the least possible obstruction to traffic and normal commercial pursuits.

Sub-section C. Protection of the Traveling Public:

All obstructions within traveled roadways shall be protected by signs, barricades, and lights where necessary for the safety of the traveling public. All barricades and obstructions shall be protected at night by signal lights which shall be suitably distributed across the roadway and kept burning from sunset to sunrise. Barricades shall be of substantial construction. Failure of the Owner or the Public Works Representative/Engineer to notify the Developer/Contractor to maintain barricades, barriers, lights, flares, danger signals, or guards shall not relieve the Developer/Contractor from its responsibility.

Sub-section D. Hazardous Conditions:

Whenever the Developer/Contractor's operations create a hazardous condition, it shall furnish flaggers and guards to give adequate warning to the public of any dangerous conditions to be encountered. It shall furnish, erect, and maintain fences, barricades, signs, lights, and other devices that may be necessary to prevent injury and damage to persons and property. Flaggers and guards shall be UDOT trained and shall hold current certification and shall be equipped with signs, flags, etc. as required by the Utah State Department of Transportation (UDOT) regulations.

Sub-section E. Dust and Debris Control:

The Developer/Contractor shall control dust and debris that originates in the construction right-of-way or site. Dust, trash, and other debris shall be controlled on a daily basis by methods that shall include, but not be limited to, the use of a dust setting spray, a "pick-up broom or street sweeper and trash disposal. The Developer/Contractor shall maintain on the project site a water truck with a minimum two thousand (2,000) gallon capacity. The Developer/Contractor shall be responsible to secure a source of water and shall obtain the necessary permission for its use. Failure by the Developer/Contractor to adequately control dust and debris may result in the Owner initiating dust and debris control measures and deducting the cost from payment due to the Developer/Contractor.

Section 1.13 CONFINEMENT OF WORK AND ACCESS TO RIGHT-OF-WAY AND EASEMENTS:

The Developer/Contractor will be required to confine construction operations within the dedicated right-of-way for public thoroughfares or within areas for which construction easements have been obtained unless it has made special arrangements with the affected property owners in advance. The Developer/Contractor will be required to protect stored materials, lawn, trees, and other features located adjacent to the proposed construction site. During construction operations, the Developer/Contractor shall construct and maintain such facilities as may be required to provide access by all property owners to their property. No person shall be cut off from access to their residences or places of business for a period exceeding eight (8) hours, unless the Developer/Contractor has made special arrangements with the affected persons prior to commencing work in the area.

Section 1.14 NOTIFICATION OF RESIDENTS:

All property owners and residents adjacent to the streets or easements affected by the construction shall be notified by the Developer/Contractor at least forty-eight (48) hours in advance of time construction begins. The Developer/Contractor can satisfy this requirement by placing a written notice on the door of each residence or business reading "Notice of Construction Operation. (Developer/Contractor) will be working on the construction of

street improvements on your street starting about _____." The Developer/Contractor shall provide a copy of the notification form at the pre-construction meeting and the method to be used (hang on door, etc.)

Section 1.15 WEATHER CONDITIONS:

In the event of temporary suspension of work, or during inclement weather, the Developer/Contractor will, and will cause its SubDeveloper/Contractors to, protect any project work or materials against damage from the weather. If, in the opinion of the Public Works Representative/Engineer, any Project work or materials become damaged by reason of failure on the part of the Developer/Contractor or any of its SubDeveloper/Contractors to so protect its work, such work or materials shall be removed and replaced at the expense of the Developer/Contractor.

Section 1.16 LAND MONUMENTS:

The Developer/Contractor shall preserve existing City, County, State, and Federal land monuments whenever possible. When these monuments cannot be preserved, the Developer/Contractor shall notify the Public Works Representative/Engineer at least two (2) weeks in advance of the proposed construction in order that the Public Works Representative/Engineer will have ample opportunity to reference these monuments for later replacement.

Section 1.17 SOURCE OF MATERIALS:

All materials furnished or incorporated in this project shall conform to the requirements of these Specifications.

The Developer/Contractor shall acquire the necessary rights, at its own expense, to take material from aggregate sources and to use properties for plant site, hauling roads, and other purposes.

The Developer/Contractor may select areas for disposal of surplus materials; however, the Developer/Contractor will be responsible for acquiring the necessary right, at its own expense, to use the property for such purpose.

Section 1.18 OPERATION AND MAINTENANCE MANUALS:

The Developer/Contractor shall furnish the Public Works Representative/Engineer with two (2) sets of all operation and maintenance manuals, drawings, diagrams, etc., for all pumps, motors, control panels, valves, meters, etc., for use in the Operation and Maintenance Manual.

Section 1.19 INTERFERING STRUCTURES, UTILITIES AND FACILITIES:

The Developer/Contractor shall exercise all possible caution to prevent damage to existing structures and utilities, whether above ground or underground. While these structures and utilities may be shown on the improvements plans, the information has been compiled from the best available sources, its completeness and accuracy cannot be guaranteed, and it is presented simply as a guide to possible difficulties. The Developer/Contractor shall notify all utility offices concerned at least forty-eight (48) hours in advance of construction operations in which a utility agency's facility may be involved. Notification to blue stakes does not necessarily cover all buried lines. This shall include, but not be limited to, irrigation, water, telephone, electric, sewer, storm drain, gas, and cable television. The Developer/Contractor shall be responsible for any and all changes to, relocation of, or re-connection to public utility facilities encountered or interrupted during the prosecution of the work, and all costs relating thereto shall be at the Developer/Contractor's expense. The Developer/Contractor shall contract with and pay Public Utility Agencies for work required in connection with all utility interference's and handle all necessary notifications, scheduling, coordination and details.

It shall be the responsibility of the Developer/Contractor to relocate and expose all existing underground structures and utilities in such a manner as to prevent damage to the same. Any structure or utilities damaged by the Work shall be repaired or replaced at the Developer/Contractor's expense.

If the Developer/Contractor encounters existing structures that will prevent construction, it shall notify the Public Works Representative/Engineer before continuing with the construction in order that the Developer's Engineer or

Public Works Representative/Engineer may make such field revisions as necessary to avoid conflict with the existing structures.

Section 1.20 MATERIAL AND COMPACTION TESTING:

During the course of the work, a Geotechnical Engineer/Testing Company may perform such tests as are required to identify materials, to determine gradation, to determine compaction characteristics, to determine moisture, to determine density of fills in place, to determine concrete strength, to determine density and mixture of asphalt. These tests will be used to verify that the construction conforms to the requirements of the specifications. Such tests are not intended to provide the Developer/Contractor with the information required by it for the proper execution of the work and their performance shall not relieve the Developer/Contractor of the necessity of completing the construction in accordance with these specifications and Standard Drawings.

The cost of such testing will be included in the Developers bond posted with the City. Public Works shall contract with a geotechnical or certified testing company to perform the necessary tests. The cost of these tests will be paid for by the Developer from the bond. Copies of the test will be furnished to the Developer/Contractor upon request.

DIVISION 2

TRENCH EXCAVATION AND BACKFILL

Section 2.01 GENERAL:

This section covers the requirements for trenching and backfilling for underground pipelines. Unless otherwise shown or ordered, pipe shall be laid in an open trench. All incidental clearing, preliminary grading, structure removal, and benching shall be considered a part of the trenching operation.

Section 2.02 BARRICADES:

Barriers shall be placed at each end of all excavations, and at such places as may be necessary along excavations, to warn all pedestrians and vehicular traffic of such excavations. Lights shall also be placed along excavations from one hour before sunset each day to one hour after sunrise of the next day, until such excavations are entirely refilled, compacted, and surfaced or final graded. All excavations shall be barricaded in such a manner as to prevent persons from walking into, falling into, or otherwise entering those excavations.

Section 2.03 BLASTING:

Blasting will not be allowed except by permission from the Public Works Representative/Engineer. The Developer/Contractor shall comply with all laws, regulations, ordinances, and safety codes relative to the handling, storage, and use of explosives. The Developer/Contractor shall be fully responsible for all damage to life and property attributable to its blasting operations. Excessive blasting or overshooting will not be permitted. The Developer/Contractor shall remove any material outside the authorized cross section, which may be shattered or loosened by blasting.

Section 2.04 SHEETING, BRACING AND SHORING OF EXCAVATIONS:

Excavations shall be sheeted, braced, and shored as required to support the walls of the excavations. These measures shall be taken to protect the workers, the work in progress, existing utilities, structures, and improvements, from damage due to sliding and settling of trench walls. All such sheeting, bracing, and shoring shall comply with the regulations of the Utah State Industrial Commission, and accident prevention and safety provisions of the Contract.

The Developer/Contractor shall be fully responsible for the adequacy of methods and materials used in trench sheeting, bracing, shoring, and other systems provided to protect workers. Injury to or death of workers resulting from inadequate trench safety measures shall be the full and complete responsibility of the Developer/Contractor. All damages resulting from lack of adequate sheeting, bracing and shoring shall be the responsibility of the Developer/Contractor, and the Developer/Contractor shall affect all necessary repairs or reconstruction at its own expense resulting from such damage.

Sheeting or shoring that does not extend below the centerline of the pipe may be removed at the discretion and responsibility of the Developer/Contractor after the pipe embedment has been placed and compacted to a level twelve inches (12") above the top of the pipe. Following removal of the sheeting or bracing, the trench shall be immediately backfilled and compacted or consolidated.

Section 2.05 CONTROL OF GROUNDWATER:

All trenches shall be kept free from water during excavation, fine grading, pipe laying and jointing, and pipe embedment operations. Where the trench bottom is mucky or otherwise unstable because of the presence of groundwater, and in all cases where the static groundwater is above the bottom of any trench or bell hole excavation, such groundwater shall be lowered to the extent necessary to keep the trench free from water and the trench bottom stable when the work within the trench is in progress. The discharge from excavation dewatering shall be conducted to natural drainage channels, gutters, drains, or storm sewers. No sanitary sewer shall be used for disposal of trench water. Surface water shall be prevented from entering trenches.

Section 2.06 TRENCH EXCAVATION:

Excavation for pipelines shall be located as shown on the Drawings or as staked in the field. Trenches shall be excavated to the depths and widths required to accommodate the construction of the pipelines, as follows:

Sub-section A. Normal Excavation:

Except in ledge-rock, cobbles, stones, or water-saturated earth, mechanical excavation of trenches shall not extend below an elevation four inches (4") above the bottom of the pipe after placement in its final position. All additional excavation necessary for preparation of the trench bottom shall be made manually.

Sub-section B. Authorized Over-Excavation:

Where ledge-rock, cobble rock, stones or other material render the trench material unsuitable for pipe bedding, as determined by the Public Works Representative/Engineer, bedding material shall be imported and placed. The trench shall be excavated to a minimum of four-inches (4") below the bottom of the pipe after placement in its final position.

Where unstable material is encountered in the excavation, foundation material may be required, as determined by the Public Works Representative/Engineer. In such cases, a minimum of eight inches (8") below the bottom of the pipe after placement in its final position shall be removed. Over-excavation not ordered, specified, or shown shall be considered to be unauthorized excavation.

Sub-section C. Unauthorized Over-Excavation:

Any excavation carried below the elevation required to install the pipe as specified in these Specifications, or directed by the Public Works Representative/Engineer, shall be considered to be unauthorized. Such excavation shall be backfilled in accordance with these Specifications for "Imported Granular Material" and "Gravel Foundation for Pipelines and Pipeline Structures," all at the Developer/Contractor's expense.

Sub-section D. Trench Width:

The trench shall be excavated such that the pipe is always centered in the trench. The minimum clear trench width at the horizontal diameter of the pipe must not be less than the outside diameter of the pipe plus twelve inches (12"). The maximum clear width of trench at the top of the pipe must not be more than the outside diameter of the pipe plus eighteen inches (18"). If a trench is excavated to a greater width, the Developer/Contractor will be required to restore the trench to an acceptable condition by following the steps outlined in these Specifications for "Trenches in Embankments."

Trench width for pipeline structures, valves, or other accessories shall be sufficient to leave at least twelve inches (12") clear between their outer surfaces and the trench. Backfill with earth under structures or valves will not be permitted. Any unauthorized excess excavation below the elevation indicated for foundation of any structures shall be backfilled in accordance with these specifications for "Imported Granular Materials," and "Gravel Foundation for Pipe & Pipeline Structures," at the Developer/Contractor's expense.

Sub-section E. Trenches in Embankments:

Before laying pipes that are to be in fill or embankment areas, the embankment shall first be placed and compacted to the specified density to a depth of not less than two feet (2') above the top of the proposed pipe. After placing and compacting the embankment, the trench for the pipe or conduit shall be excavated through the fill and fine graded and the pipe installed as specified.

Sub-section F. Placement of Excavated Material:

All excess material shall be hauled away from the construction site and disposed of in an area obtained by the Developer/Contractor and approved by the Public Works Representative/Engineer. The Developer/Contractor shall be responsible for all rights-of-way, easements, and access associated with the disposal of excess excavated material. It shall further be responsible to obtain permission from the property owner or person controlling the property where the Developer/Contractor plans to dispose of excavated material. No compensation will be made to the Developer/Contractor for disposal of excess excavated material.

Non-excess excavated material shall be piled in a manner that will not endanger the work and will avoid obstructing sidewalks and driveways. Gutters and irrigation ditches shall be kept clear or other satisfactory provisions shall be made for street drainage and continuity of irrigation.

Grading of the area surrounding the trenches, including excavated materials, shall be performed as necessary to prevent surface water from flowing into trenches, or other excavations. Control of groundwater shall be as specified in section 2.05, Control of Groundwater.

Sub-section G. Fine Grading the Trench Bottom:

The bottom of the trench shall be accurately graded and prepared to provide uniform bearing and support on undisturbed soil or compacted granular bedding at every point along the entire length of the pipe. Bell holes shall be hand excavated after the trench bottom has been fine graded. Bell holes shall be only large enough to permit making the joints and to assure that any portion of the joint or bell does not support the pipe.

Section 2.07 TRENCH BACKFILL

Trench backfill for piping consists of four zones: foundation, bedding, initial backfill, and final backfill. "Pipe embedment" is a commonly used term that refers to the region including the bedding and initial backfill zones, or any region within one foot (1') of any pipe, pipeline structure, or accessory. The foundation is defined as the region between eight inches (8") and four inches (4") below the bottom of the pipe. The bedding is defined as the region between four inches (4") below the bottom of the pipe and the bottom of the pipe. The initial backfill is defined as the region between the bottom of the pipe and twelve inches (12") above the top of the pipe. The final backfill is defined as the region above twelve inches (12") above the pipe.

All fill materials shall be compacted as specified in this section.

The Public Works Representative/Engineer shall determine the suitability of excavated materials for use as foundation, bedding, initial backfill, and final backfill. When the excavated materials are not satisfactory for foundation, bedding, or backfill, the Developer/Contractor shall provide imported granular material.

Sub-section A. Imported Granular Material:

Imported granular material for foundation, bedding, and backfill shall be cleaned crushed rock or gravel, free from sod, vegetation, and other organic or deleterious material. Slag will not be allowed in the pipe embedment. Imported granular material shall conform to the following gradation specifications:

1. **Foundation Material.** One hundred percent (100%) less than two-inch (2") and maximum of five percent (5%) less than one-half-inch (1/2").

2. **Embedment Material.** Ductile-iron pipe - One hundred percent (100%) less than two-inch (2") and maximum of five percent (5%) passing a No. 200 sieve.

PVC or polyethylene pipe - One hundred percent (100%) less than one-inch (1") and maximum five percent (5%) passing a No. 200 sieve.

3. **Final Backfill Material.** One hundred percent (100%) less than three-inch (3") and maximum of fifteen percent (15%) passing a No. 200 sieve.

Sub-section B. Foundation Placement:

When over-excavation is authorized by the Public Works Representative/Engineer, foundation material shall be placed in the foundation zone and below. The foundation material shall be placed so that the trench can be properly fine graded as specified. The foundation material shall be deposited over the entire trench width and compacted in layers. The layers shall have a maximum uncompacted thickness of six-inches (6").

The material shall then be fine graded in accordance with the specification for Fine grading herein.

Sub-section C. Pipe Embedment:

Embedment material for other than PVC pipe may be excavated materials consisting of loose earth, sand, or gravel having no material larger than two-inches (2") in any dimension. For PVC pipe, the material must be no greater than-one inch (1") in any dimension. If the excavated materials are not satisfactory, the specified imported granular material shall be used for pipe embedment.

1. **Bedding.** The bedding material shall be deposited over the entire trench width to a compacted thickness of no less than four inches (4"). The material shall have a maximum uncompacted thickness of six inches (6").

2. **Initial Backfill.** After the pipe is in place, initial backfill material shall be placed at any point below the mid-point of the pipe simultaneously and uniformly on both sides of the pipe in un-compacted layers not to exceed ten-inches (10") or one-half the diameter of the pipe, whichever is less. Initial backfill material shall be placed with care to prevent displacement of or damage to the pipe during the embedment process. Initial backfill material shall be scattered alongside the pipe and not dropped into the trench in compact masses.

That section of the pipe zone from the mid-point of the pipe to twelve inches (12") above the top of the pipe shall then be filled with initial backfill materials and compacted.

Sub-section D. Final Backfill:

Final backfill shall be from twelve inches (12") above the top of the pipe to the level shown on the Drawings. Excavated materials consisting of fines, sand, and gravel shall be used for final backfill. No oil cake, bituminous pavement, concrete, rock, or other lumpy material shall be used in the final backfill unless these materials are scattered and do not exceed six inches (6") in any dimension. Perishable or spongy material shall not be used in final backfilling.

Sub-section E. Compaction:

Backfill shall be compacted by means of sheepsfoot rollers, pneumatic tire rollers, vibrating rollers, or mechanical tampers.

Under pavements or other surface improvements the in-place density shall be a minimum of ninety-six percent (96%) of laboratory standard the maximum dry density as determined by AASHTO T-99. In shoulders and other areas the in-place density shall be a minimum of ninety percent (90%) of the maximum dry density as determined by AASHTO T-99.

Fill material shall be placed at a moisture content and un-compacted lift thickness such that after compaction the required relative densities will be produced. In no event will the material be placed in lifts that, prior to compaction, exceed six inches (6") for foundation and embedment and twelve inches (12") for final backfill.

Prior to compaction each layer shall be evenly spread, moistened, and worked by disk harrowing or other equivalent means.

If the required relative density is not attained, test sections will be required to determine any adjustments in compaction equipment, thickness of layers, moisture content and compactive effort necessary to attain the specified minimum relative density.

Approval of equipment, thickness of layers, moisture content, and compactive effort shall not be deemed to relieve the Developer/Contractor of the responsibility for attaining the specified minimum relative densities. The Developer/Contractor, in planning its work, shall allow sufficient time to perform the work connected with test sections and to permit the Public Works Representative/Engineer to make tests for relative densities.

Section 2.08 TRENCH CROSSINGS AND EASEMENTS:

At road crossings or where existing driveways occur on a road, the Developer/Contractor shall make provisions for trench crossings either by means of backfill, tunnels, or temporary bridges.

Any disturbance to property caused by the Developer/Contractor's activity within easements shall be restored to the satisfaction of the owner of the property. If necessary, shrubs, fences, or other objects shall be removed carefully. If work must occur on a lawn, the lawn shall be cut to a width of two feet (2') wider than the intended work area (one foot (1') on each side). The lawn sod shall be stacked separately from and shall not be mixed with other excavated material.

After the sod is removed, if excavation is necessary, the topsoil shall be removed to a depth of twelve inches (12"), or the actual depth of the topsoil, whichever is less. The topsoil shall be stored separately from and shall not be mixed with other excavated material.

Following completion of the backfilling and the compaction of the trench, the Developer/Contractor shall replace topsoil, lawn sod, shrubs, fences, and other items that may have been removed from within the easement area and shall clean up and remove any rocks, dirt or any other debris that remain from the construction work. The Developer/Contractor shall obtain a release from the property owner stating that the repairs have been made to the satisfaction of the Owner. A copy of said release shall be delivered to the Public Works Representative/Engineer.

Section 2.09 RESTORATION OF CONSTRUCTION SITE:

During the progress of the Work, the Developer/Contractor shall clean up all construction debris, excess excavation, and excess materials, and shall restore all fences, irrigation structures, ditches, culverts, and similar items. The Developer/Contractor shall stockpile the excavated trench material so as to do the least damage to adjacent grassed areas, or fences, regardless of whether these are on private property or public rights-of-way. All excavated materials shall be removed from grassed and planted areas and these surfaces shall be left in a conditions equivalent to their original surface and free from all rocks, gravel, boulders, or other foreign materials.

Section 2.10 DEVELOPER/CONTRACTOR'S RESPONSIBILITY:

The Developer/Contractor will be responsible to see that the backfilling and compaction are properly and adequately done. Settlement of trenches within a period of two- (2) years after final acceptance of the project shall be considered incontrovertible evidence of inadequate compaction, and the Developer/Contractor shall be responsible for correcting the condition in accordance with the provisions of these Specifications. This includes the replacement of sidewalk, curb and gutter, and other surface improvements.

DIVISION 3A

PRESSURE PIPE
CULINARY WATER

Section 3A.01 GENERAL:

This Division covers furnishing and installing pressure pipe to the lines and grades shown on the drawings and/or established in the field, and all flushing, testing, repairing, and required to ensure adequate and safe operation of the water system. Ductile iron pipe shall be used in all areas east of Geneva Road and PVC pipe will be used in all areas west of Geneva Road unless soil corrosivity evaluation, as reviewed and approved by the City Public Works Representative/Engineer/Public Works Representative dictates otherwise.

Section 3A.02 DUCTILE IRON PIPE:

Sub-section A. Materials:

Ductile iron pipe shall conform to all requirements of ANSI/AWWA C151/A21.51, "American National Standard for Ductile Iron Pipe, Centrifugally Cast in Metal Molds or Sand-Lined molds, for Water or Other Liquids." Minimum pressure Class will be 250 for pipes larger than 12-inch diameter. Pipes of 12-inch diameter and smaller shall be pressure Class 350. If thickness class pipe is used, pipes of diameters from 4-inches through 10-inches shall be minimum Class 51 and pipe from 12-inch diameter and larger shall be minimum Class 50.

All pipe shall be made of good quality Ductile Cast Iron and of such chemical composition and structure as is required to meet the physical and mechanical property requirements of the standard.

Sub-section B. Joints:

(1) Mechanical Joints: All mechanical joints shall meet requirements of ANSI/AWWA C111/A21.11. All gasket surfaces shall be smooth and free from imperfections. Gaskets shall conform to tests in accordance with specifications and shall be less than one year old.

(2) Push-on Joints: All push-on joints shall meet the requirements of ANSI/AWWA C111/A21.11. Gaskets shall be free from defects and not over one year old.

Lubricants shall be non-toxic and have no deteriorating effects on gasket materials. It shall not impart taste to water in a pipe. It shall conform in every way to ANSI 21.1

(3) Flanged Joints: Flanges shall meet the requirements of ANSI/AWWA C110/A21.10, "American National Standard for Ductile Iron and Gray Iron Fittings, 3-inch Through 48-inch for Water and Other Liquids." Flanged joints shall be bolted firmly with machine, stud or cap bolts of proper size. Flange maybe cast integrally with the pipe or may be screwed on threaded pipe. Flanges shall be faced and drilled and of proper dimensions for size and pressure required. Bolts and nuts, unless otherwise specified, shall be made of the best quality refined iron or metal steel and have clean, well-fitting threads. Bolts will be provided with standard hexagonal nuts and standard hexagonal heads. Bolts shall be of the diameter required for each flange and when installed shall be of length so that no more than 3/8-inch nor less than 1/8-inch extends past face of nut. All buried fittings having steel bolts shall be coated with a non-oxide wax and wrapped with polyethylene.

Gaskets shall be rubber, either ring or full face, and are 1/8th-inch thick. A gasket for each flanged joint of proper size as shown on the drawings.

Sub-section C. Coatings and Linings for Ductile Iron Pipe:

All exterior surfaces of pipe and fittings shall be coated with hot coal tar approximately 1 mil thick. All interior surfaces shall be cement mortar lined with a standard thickness according to ANSI/AWWA C104/A21.4-80.

Sub-section D. Corrosion Protection and Soil Tests:

When the Public Works/Engineer determines that a potential for corrosive conditions exists such as poor drainage or reactive soils, pipe and fittings shall be encased in polyethylene wrap. Polyethylene encasement of ductile iron pipe shall meet the requirements of ANSI A21.5 or AWWA C105.

Sub-section E. Flanges:

Flanges when required shall conform to ANSI/AWWA C115/A21.15-83.

Sub-section F. Fittings:

Fittings for Ductile Iron Pipe shall conform to the provisions of ANSI/AWWA C110/A21.10-82 or C153/A21.53-58.

Sub-section G. Magnetic Locator Tape:

All pipe shall include a 3-inch magnetic locator tape installed in the pipeline trench approximately 12-inches below the ground surface.

Identification tape shall be furnished with white or black printing on a colored field having the words:

CAUTION: POTABLE WATER - BELOW.

Section 3A.03 PVC PIPE:

Sub-section A. Materials:

Pipe for the transmission and distribution of water shall be manufactured in accordance with AWWA C900-81, "AWWA Standard for Polyvinyl Chloride (PVC) Pressure Pipe, 4-inch through 12-inch, for Water". The PVC pipe shall have a cast-iron-pipe-equivalent outside diameter. PVC pipe 14-inches and larger shall be manufactured in accordance with AWWA C905-88, "AWWA Standard for Polyvinyl Chloride (PVC) Water Transmission Pipe, Nominal Diameters 14-inch through 36-inch" All PVC pipe 4-inch and larger shall be DR. 14 with a working pressure of 200 PSI. Pipe smaller than 4-inch shall be schedule 40 PVC.

Sub-section B. Joints:

Joints shall be push on rubber gasket type. Lubrication shall be water soluble, non-toxic, non-objectionable in taste and odor imparted to the water, non-supporting of bacteria growth, and have no deteriorating effect on the PVC pipe or rubber gaskets.

Sub-section C. Fittings:

All fittings to be used with the PVC pipe shall be the same as fittings for Ductile Iron Pipe and shall conform to the provisions of ANSI/AWWA C110/A21.10-82 or C153/A21.53-58.

Sub-section D. Magnetic Locator Tape:

All pipe shall include a 3-inch magnetic locator tape installed in the pipeline trench approximately 12-inches below the ground surface.

Identification tape shall be furnished with white or black printing on a colored field having the words:

CAUTION: POTABLE WATER - BELOW.

Section 3A.04 PIPE INSTALLATION:

Sub-section A. Cutting:

Cutting of pipe for closure pieces or for other reasons shall be done in a neat and workmanlike manner by a method recommended by the manufacturer. After cutting, the pipe shall be beveled and filed to prevent gasket damage in joint assembly.

Sub-section B. Dewatering of Trench:

Where water is encountered in the trench, it shall be removed during pipe laying operations and the trench so maintained until the ends of the pipe are sealed. See "Control of Groundwater" in Division 2 Trench - Excavation and Backfill.

Sub-section C. Laying of Pipe:

The pipe and pipe coating (where applicable) shall be inspected for defects before installation. Any defects shall be repaired or the pipe shall be replaced, whichever is deemed necessary by the Public Works Representative/Engineer.

All pipe shall be laid and maintained to the required lines and grades with fittings and valves at the required locations. The pipes shall be installed with a 48-inch minimum cover from finished road surface for culinary water. The Developer/Contractor shall be responsible to install the pipe line to the alignment set by the Public Works Representative/Engineer or as shown on the Drawings.

All pipes, fittings and valves shall be carefully lowered from the truck when unloading or when installing into the trench. This should be done one piece at a time in order to prevent damage to pipe materials and protective coatings and linings. Under no circumstances shall materials be dropped or dumped from the truck or into the trench.

The Developer/Contractor shall take the necessary precautions such that foreign materials do not enter into the pipe. No debris, tools, or other materials shall be placed in the pipe during laying operations. When laying of pipe is not in progress, the pipe shall be closed by a water-tight plug.

Maximum deflections at pipe joints shall not exceed the joint specifications of AWWA C600 of latest revision, or the recommendations of the pipe manufacturer.

Deflections in PVC pipe shall be made by longitudinal bending of the barrel of the pipe rather than deflecting the pipe joints. Longitudinal bending shall be limited to eighty percent (80%) of the manufactures recommended minimum bending radius.

Sub-section D. Pipe Bedding:

All pipes shall be protected from lateral displacement and possible damage resulting from impact or unbalanced loading during backfilling operations by being adequately bedding.

In the event trench materials are not, in the judgement of the Public Works Representative/Engineer, satisfactory for pipe bedding, imported granular bedding will be required. See Division 2 of these specifications.

Sub-section E. Thrust Blocking:

Thrust blocking shall be applied at all tees, valves, plugs, caps and at bends deflecting 11 1/4 degrees or more. The fitting shall be encased in a 12 mil protective plastic wrap before the thrust block is poured. Reaction blocking shall be concrete having a compressive strength of not less than 3000 pounds per square inch at 28 days. Blocking shall be placed between undisturbed soil and the fitting to be anchored. The area of bearing on the pipe and on the ground shall be as shown in the Drawings. The blocking shall be so placed that the pipe and the fittings will be accessible for repair.

Sub-section F. Connections to Existing Water Lines:

Information on the drawings regarding existing water lines is taken from "record" drawings from the city or utility company files and may or may not be accurate as to size, type of material or location. The Developer/Contractor will be responsible to determine the proper fittings and materials required, obtain the Public Works Representative/Engineer's approval of the planned connection, and perform the construction in a suitable fashion. Where fitting sizes, such as tees and crosses, are shown on the plans, those sizes will be used. However, no attempt has been made to show all needed fittings or materials.

Section 3A.05 WATER SERVICE LATERALS

Water service laterals shall be constructed with materials specified and at the locations shown on the Standard Drawings or at the actual location established during construction.

Pipe for water service laterals shall be one-inch (1") Type K-soft copper tubing or larger and shall comply with ASTM Specification B88.

Sub-section A. Extent of Laterals:

New water service laterals shall extend from the water main to five-foot (5') past the meter box. Type K-soft copper tubing water services shall not have any joints between the corporation stop at the main and the meter setter.

Water service laterals relocated during construction of new pipelines shall extend from the water main to the water meter if the existing service is other than copper or is in poor condition. Type K-soft copper tubing water services shall not have any joints between the corporation stop and the meter.

Sub-section B. Excavation and Backfill:

Trench excavation and backfill shall conform to the applicable paragraphs of Division 2. Bedding shall meet the requirements of Division 3.

Sub-section C. Connection to Main:

Connections of services to main lines shall be direct tap on ductile iron mains and through a double strap cast iron service saddle on PVC mains, corporation type stop and 24-inch gooseneck formed with the tubing. All connections shall be made using pack joints (compression) type fittings. The service saddle shall be a Ford F-202, double strap, service saddle with one-inch (1") IPT outlet or equivalent. The corporation stop shall be a one-inch (1") Mueller H-15008 "CC" thread for direct tap and a Ford Pack joint F-1100 for service saddle tap.

On existing services the existing connection to main will be used unless damaged or leaking.

Sub-section D. Meter Setter, Box and Cover:

The meter setter shall be one-inch (1") Ford dual check. The meter box shall be 21-inch (21") diameter by thirty-six-inch (36") high corrugated with groove to fit over the inlet and outlet line. The meter cover to be D&L Supply L-2242 with recessed standard waterworks pentagon head locking device and raised cast center rim. Cover to be three-eighths-inch (3/8") above top back of sidewalk. Centerline of cover shall be one-foot (1') behind back of walk. The cover shall be marked "Water."

Sub-section E. Special Joints and Fittings:

1. Solder and Sweat Joints. Joints in copper tubing shall be made by the appropriate use of approved brass or copper fittings. Surface to be joined by soldering shall be thoroughly cleaned bright by manual or mechanical means. The joints shall be properly fluxed with an approved non-corrosive type flux and made up with approved solder. All solders and fluxes shall not have a lead content that exceeds current EPA guidelines.

2. Copper Tubing to Screw Pipe Joints. Joints from copper tubing to threaded pipe shall be made by the use of brass adapter fittings.

Sub-section F. Separation:

Water service lines shall not be run or laid in the same trench as the building sewer lateral, unless the water service line is placed on a solid shelf excavated at one side of the common trench. At all locations there shall be at least twelve (12) inches of separation **horizontally and vertically** above the sewer lateral.

Sub-section G. Flushing, Testing and Disinfecting:

Flushing, testing and disinfecting shall be done at the time the water main is flushed, tested and disinfected. The end of the trench where the stub out past the meter is located shall be left open to allow for discharging water out of the service line for proper flushing and to insure that the line has been adequately disinfected. The line shall be flushed thoroughly following installation. Flushing, testing and disinfecting shall conform to the applicable paragraphs of this division.

On existing services the Developer/Contractor shall take precautions to prevent contamination of the pipe and connections during installation. The line shall be flushed thoroughly following installation.

Sub-section H. Damage and Repair of Water Mains and Appurtenances:

The Developer/Contractor shall be responsible for any damage to water mains and water facilities caused by his operations. The Developer/Contractor may be relieved of the responsibility under the following conditions:

(1) He has not excavated below or beyond the required excavation lines, and

(2) He has given proper and timely notice of his work plans, and

(3) He has used reasonable care, and cooperated, minimizing the damage.

Any damage to water gates, hydrants, valve chambers, meter boxes, and other surface appurtenances that result from the Developer/Contractor's operation shall be its sole responsibility.

Section 3A.06 FLUSHING, DISINFECTING, AND TESTING:

Sub-section A. Flushing:

All new water systems or extensions to existing systems shall be thoroughly flushed before being placed in service. Flushing shall be accomplished through hydrants, or end of line blow-off assemblies at a minimum flushing velocity of 2.5-feet per second. See chart below.

FLOW RATE AND OPENINGS TO FLUSH PIPELINES (40- psi Residual Pressure)	
Pipe Size (inches)	Flow Required to Produce 2.5 fps velocity (gpm)
2	26
4	100
6	220
8	390
10	610
12	880
14	1,200
16	1,565
18	1,980
20	2,450
24	3,525
30	5,507

Sub-section B. Disinfection:

After flushing, all culinary water lines shall be disinfected by chlorination. Chlorination shall provide a minimum of 25 ppm residual after 24 hours contact in the pipeline. This may be expected with an application of 50 ppm, although some conditions may require more. Chlorine in the form of a 1% slurry of high-test calcium hypochlorite (HTH, Perchloron, Pittchlor, etc. which are 70% available chlorine by weight) shall be fed into the pipeline in such a manner as to mix with the water flowing in the pipeline. (A 1% slurry - 10,000 ppm - results from mixing one pound of calcium hypochlorite with 8.40 gallons of water.)

The following table provides information as to the required quantity of slurry to be used per 100 feet of pipe to provide a chlorine concentration of 50 ppm:

Pipe Size (in.)	Vol. of 100 ft. Length (gal)	Required Amount of 1 % Chlorine Slurry (gal)
1 ½	9.18	0.07
2	16.32	0.12
2 ½	25.50	0.18
3	36.73	0.26
4	65.28	0.47
6	146.90	1.05
8	261.10	1.87
10	408.10	2.92
12	587.60	4.20

During the process of chlorinating the pipeline, all valves and other pipeline appurtenances shall be operated several times to provide sufficient contact with the chlorinating agent. Following chlorination, the water line shall be drained and thoroughly flushed according to Section A above and, if necessary, rechlorinated until a satisfactory bacteriological test is obtained.

Disinfection shall conform to the requirements of AWWA C651-86 (or latest edition).

Sub-section C. Pressure Test:

All newly laid pipes or any valved section thereof shall be subjected to a hydrostatic pressure. A leakage test shall be conducted concurrently with the pressure test.

1. Test Pressure Restrictions:

Test pressures shall:

a) Not be less than 1.5 times the static pressure at the highest point along the test section.

b) Not exceed pipe or thrust restraint design pressures.

c) Be of at least 2-hour duration.

d) Not vary by more than plus or minus five ($\pm$ 5) psi for the duration of the test.

e) Not exceed twice the rated pressure of the valves or hydrants when the pressure boundary of the test section includes closed gate valves or hydrants.

f) Not exceed the rated pressure of the valves when the test boundary of the test section includes closed, resilient-seated gate valves or butterfly valves.

2. Pressurization:

Each valved section of pipe shall be slowly filled with water and the specified test pressure, based on the elevation of the lowest point of the line or section under test and corrected to the elevation of the test gage, shall be applied by means of a pump connected to the pipe in a manner satisfactory to the Public Works Representative/Engineer.

3. Air Removal:

Before applying the specified test pressure, air shall be expelled completely from the pipe, valves, and hydrants. If permanent air vents are not located at all high points, the Developer/Contractor shall install corporation cocks at such points so that the air can be expelled as the line is filled with water. After all the air has been expelled, the corporation cocks shall be closed and the test pressure applied. At the conclusion of the pressure test, the corporation cocks shall be removed and plugged.

4. Examination:

All exposed pipe, fittings, valves, hydrants, and joints shall be examined carefully during the test. Any damaged or defective pipe, fittings, valves, or hydrants that are discovered following the pressure test shall be repaired or replaced with sound materials and the test shall be repeated until it is satisfactory to the Owner.

Sub-section D. Leakage Test:

A leakage test shall be conducted concurrently with the pressure test.

1. Leakage Defined:

Leakage shall be defined as the quantity of water that must be supplied into the newly laid pipe, or any valved section thereof, to maintain pressure within 5 psi of the specified test pressure after the air in the pipeline has been expelled and the pipe has been filled with water.

2. Allowable Leakage:

No pipe installation will be accepted if the leakage is greater than that determined by the following formula:

$$L = \frac{SD(P)^{0.5}}{133{,}200}$$

in which L is the allowable leakage, in gallons per hour; S is the length of pipeline tested in feet; D is the nominal diameter of the pipe, in inches; and P is the average test pressure during the leakage test, in pounds per square inch gage.

a) Allowable leakage at various pressures is shown in Table 1.

b) When testing against closed metal-seated valves, an additional leakage per closed valve of 0.0078 gal/hr/in. of nominal valve size shall be allowed.

c) When hydrants are in the test section, the test shall be made against the closed hydrant.

TABLE 1

Allowable Leakage per 1000 ft of Pipeline - gph

Avg. Test Pressure *psi (Bar)*	Nominal Pipe Diameter–*in.*															
	3	4	6	8	10	12	14	16	18	20	24	30	36	42	48	54
450 (31)	0.48	0.64	0.95	1.27	1.59	1.91	2.23	2.55	2.87	3.18	3.82	4.78	5.73	6.69	7.64	8.60
400 (28)	0.45	0.60	0.90	1.20	1.50	1.80	2.10	2.40	2.70	3.00	3.60	4.50	5.41	6.31	7.21	8.11
350 (24)	0.42	0.56	0.84	1.12	1.40	1.69	1.97	2.25	2.53	2.81	3.37	4.21	5.06	5.90	6.74	7.58
300 (21)	0.39	0.52	0.78	1.04	1.30	1.56	1.82	2.08	2.34	2.60	3.12	3.90	4.68	5.46	6.24	7.02
275 (19)	0.37	0.50	0.75	1.00	1.24	1.49	1.74	1.99	2.24	2.49	2.99	3.73	4.48	5.23	5.98	6.72
250 (17)	0.36	0.47	0.71	0.95	1.19	1.42	1.66	1.90	2.14	2.37	2.85	3.56	4.27	4.99	5.70	6.41
225 (16)	0.34	0.45	0.68	0.90	1.13	1.35	1.58	1.80	2.03	2.25	2.70	3.38	4.05	4.73	5.41	6.03
200 (14)	0.32	0.43	0.64	0.85	1.06	1.28	1.48	1.70	1.91	2.12	2.55	3.19	3.82	4.46	5.09	5.73
175 (12)	0.30	0.40	0.59	0.80	0.99	1.19	1.39	1.59	1.79	1.98	2.38	2.98	3.58	4.17	4.77	5.36
150 (10)	0.28	0.37	0.55	0.74	0.92	1.10	1.29	1.47	1.66	1.84	2.21	2.76	3.31	3.86	4.41	4.97
125 (9)	0.25	0.34	0.50	0.67	0.84	1.01	1.18	1.34	1.51	1.68	2.01	2.52	3.02	3.53	4.03	4.53
100 (7)	0.23	0.30	0.45	0.60	0.75	0.90	1.05	1.20	1.35	1.50	1.80	2.25	2.70	3.15	3.60	4.05

*If the pipeline under test contains sections of various diameters, the allowable leakage will be the sum of the computed leakage for each size.
**To obtain leakage in liters/hour, multiply the values in the table by 3.785.

3. Acceptance of Installation:

Acceptance shall be determined on the basis of allowable leakage. If any test of pipe laid discloses leakage greater than specified, the Developer/Contractor shall, at its own expense, locate and repair the defective material until the leakage is within the specified allowance.

All visible leaks are to be repaired regardless of the amount of leakage.

DIVISION 4

CONCRETE PIPE

Section 4.01 GENERAL:

This section covers the requirements for concrete pipe materials and installation in sanitary sewer, storm drain, and other gravity line construction.

Section 4.02 PIPE:

Concrete pipe used in sewer line, storm drain line and other gravity line construction shall be reinforced concrete pipe or non-reinforced concrete pipe, as required by design loading and fill heights and as follows:

Sub-section A. Reinforced Concrete Pipe:

All reinforced concrete pipe used in the construction shall be of the rubber gasket type, bell and spigot joint design, conforming to the requirements of the latest revision of ASTM Designation C-76. Pipe class shall be as shown on the Drawings. The minimum joint length of all pipes provided shall be 7 1/2 feet. All pipe 12-inch diameter and larger shall be reinforced concrete.

Sub-section B. Non-Reinforced Concrete Pipe:

All non-reinforced concrete pipe used in the construction shall be of the rubber gasket type, bell and spigot joint design, conforming to the requirements of the latest revision of ASTM Designation C-14. Pipe class shall be as shown on the Drawings. The minimum joint length for pipe shall be four feet for pipe up to ten inches and seven and a half feet for all other pipe.

Sub-section C. Bell and Spigot Joints:

Bell and spigot joints, including rubber gaskets, shall conform to the requirements of the latest revision of ASTM Designation C-443. The pipe joint shall be so designed as to provide for self-centering, and when assembled, to compress the gasket to form a watertight seal. The gasket shall be confined in a groove on the spigot, so that pipe movement or hydrostatic pressure cannot displace the gasket.

Sub-section D. Minimum Size and Slope Requirements:

In no case shall sanitary sewer mains be less than eight inches in diameter. Sewers shall be laid with uniform slope between manholes. All sewers shall be designed and constructed to give mean velocities of not less than 2 feet per second when flowing full, based on Manning's formula using an n value of .013. Absolute minimum slope allowed shall be those published by the Utah Department of Environmental Quality, Division of Water Quality as Administrative Rules for Design Requirements for Wastewater Collection, Treatment and Disposal System, R317-3, **Table R317-3-2.3 (D)(4) Minimum Slopes**.

Whenever possible the slope should exceed 0.006 ft/ft. The pipe should be sized to meet anticipated hydraulic loads, increasing the pipe size to reduce the minimum slope requirements shall not be allowed. Sewer slopes shall not exceed 0.12 ft/ft, drop manholes shall be used when steeper slopes are needed, drop manholes shall be used to keep line grade below maximum grade allowed.

Section 4.03 PIPE LAYING:

All concrete pipe installation shall proceed upgrade on a stable foundation, with joints closely and accurately fitted. Rubber gaskets shall be fitted properly in place, and care shall be taken in joining the pipe units to avoid twisting of gaskets. Joints shall be clean and dry, and a joint lubricant as recommended by the pipe supplier shall be applied uniformly to the mating joint surfaces to facilitate easy positive joint closure.

Pipe shall be installed with uniform bearing under the full length of the barrel, with suitable excavations being made to receive pipe bells.

Select material shall be compacted around the pipe to firmly bed the pipe in position. If adjustment of position of a pipe length is required after being laid, it shall be removed and re-jointed as for a new pipe. When laying is not in progress, the ends of the pipe shall be closed with a tight-fitting stopper to prevent the entrance of foreign material.

In addition to the above requirements, all pipe installation shall comply with the specific requirements of the pipe manufacturer.

Section 4.04 GRAVEL FOUNDATION FOR PIPE:

Wherever the subgrade material does not afford a sufficiently solid foundation to support the pipe and superimposed load, or where groundwater must be drained, the subgrade shall be excavated to such depth as may be necessary and replaced with crushed rock or gravel compacted into place.

Gravel for concrete pipe foundation shall be clean crushed rock or gravel with one hundred percent (100%) passing a one-inch (1") screen and five percent (5%) passing a No. 4 sieve.

Section 4.05 INSTALLATION REQUIREMENTS FOR LINE AND GRADE:

All concrete pipe shall be installed accurately to the defined line and grade with the following limits:

Variance from established line and grade shall not be greater than one-sixteenth (1/16) inch per inch of pipe diameter in ten feet, and not to exceed one-half inch in ten feet, provided that such variation does not result in a level or reverse sloping invert; provided also that variation in the invert elevation between adjoining ends of pipe, due to non-concentricity of joining surface and pipe interior surfaces, does not exceed one-sixty-fourth (1/64) inch per inch of pipe diameter, or one-half (1/2) inch maximum.

Section 4.06 PIPE BEDDING:

All pipes shall be protected from lateral displacement and possible damage resulting from impact or unbalanced loading during backfilling operations by being adequately bedded.

A groove shall be excavated in the bottom of the trench to receive the bottom quadrant of the pipe. Before preparing the groove, the trench bottom shall be excavated or filled and compacted to an elevation sufficiently above the grade of the pipe so that, when completed, the pipe will be true to line and grade. Bell holes shall be excavated so that only the barrel of the pipe receives bearing from the trench bottom.

Pipe bedding materials placed at any point below the mid-point of the pipe shall be deposited and compacted in layers not to exceed ten-inches (10") in uncompacted depth. Deposition and compaction of bedding materials shall be done simultaneously and uniformly on both sides of the pipe. Compaction shall be accomplished with hand or mechanical compactors. All bedding materials shall be placed in the trench in such a manner that they will be scattered alongside the pipe and not dropped into the trench in compact masses. Bedding materials shall be loose earth, free from lumps; sand or gravel, free from rocks larger than two-inch (2") diameter. All materials shall be free from roots, sod, or other vegetable matter.

In the event trench materials are not satisfactory for pipe bedding, modified bedding will be required. Modified bedding shall consist of placing compacted granular material on each side of and to the level of twelve-inches (12") above the top of the pipe.

Modified bedding material shall be graded as follows: One-hundred percent (100%) passing a one and one-half inch (1-1/2") screen and five percent (5%) passing a No. 4 sieve.

Section 4.07 TESTS:

The Developer/Contractor will be required to conduct an air test and displacement test in the presence of the Public Works Representative/Engineer or his representative. If these tests prove to be inconclusive, any or all of the other required tests shall be conducted in the presence of the Public Works Representative/Engineer or his representative. Tests shall be performed as follows:

Sub-section A. Displacement Test:

In conducting the displacement test a light will be flashed between manholes or, if the manholes have not as yet been constructed, between the locations of the manholes, by means of a flashlight or by reflecting sunlight with a mirror. If the illuminated interior of the pipe shows broken, misaligned or displaced pipe or other defects, the defects designated by the Public Works Representative/Engineer shall be remedied at the Developer/Contractor's expense.

Sub-section B. Infiltration Test:

The Developer/Contractor shall furnish labor, equipment, and materials, including pumps, and shall assist the Public Works Representative/Engineer in making infiltration tests of the completed line before it can be placed into service. The Developer/Contractor shall furnish and install the measuring weirs or other measuring devices. The length of line to be tested at any time shall be subject to the approval of the Public Works Representative/Engineer. The maximum allowable infiltration shall not exceed one-hundred-fifty (150) gallons per inch diameter per mile per twenty-four hours (24 hrs) for all installed pipe. If the quantity of infiltration is in excess of the maximum allowable, the leaking joints shall be repaired to the satisfaction of the Public Works Representative/Engineer at the expense of the Developer/Contractor.

Sub-section C. Exfiltration Test:

The Developer/Contractor shall furnish labor, equipment, and materials, including pumps, and shall assist the Public Works Representative/Engineer in making ex-filtration tests of the completed line before it can be placed into service. The length of line to be tested at one time shall be limited to the length between adjacent manholes. The maximum allowable ex-filtration shall not exceed one-hundred-fifty (150) gallons per inch diameter per mile per 24 hours for all installed pipe. The end of the line which projects into the manhole shall be plugged. The pipe shall then be filled with water from the upper manhole, and the line maintained under a light pressure of four feet (4') of head. The inflow of water necessary to maintain this head shall be recorded as the leakage of the system. If the quantity of ex-filtration is in excess of the maximum allowable, the leaking joints shall be repaired to the satisfaction of the Public Works Representative/Engineer at the expense of the Developer/Contractor.

Sub-section D. Air Testing:

The Developer/Contractor or his representative (a qualified firm or individual agreed upon by the Public Works Representative/Engineer and the Developer/Contractor) shall furnish labor, equipment, and materials, including pumps and compressors, and shall perform, in the presence of the Public Works Representative/Engineer, air tests of the completed pipe before it can be placed

in service. Each section of sanitary sewer pipeline between manholes shall be tested after all the four-inch service laterals (and plugs) have been installed. Each test section shall be pressurized to 4.0 psi. For the purpose of stabilizing the air pressure in each test section, the 4.0 psi pressure shall be maintained for a two-minute period. Each test section shall then be re-pressurized to 4.0 psi for a period of four minutes. The test section shall be accepted if, after four minutes, the pressure gauge indicates 3.5 psi or greater. Failure of the Developer/Contractor's testing equipment to properly function shall render the test unacceptable. All faulty sections of pipeline shall be repaired and re-tested until the minimum air testing requirements have been met.

Section 4.08 MANHOLE CONNECTIONS:

Concrete pipe connections to manholes shall be achieved by use of manhole coupling adapters, rubber gaskets, positive seal gasket system with 300 series nonmagnetic corrosion-resistant steel bands, or grouting a bell or spigot pipe at the appropriate locations. Connections shall meet the requirements of Division 5 MANHOLES.

Section 4.09 SEWER SERVICE LATERALS

New service laterals shall be constructed with materials and procedures as specified herein.

Existing service laterals shall be constructed with materials compatible with the existing laterals with appropriate connections for joining the ends of existing laterals.
All laterals shall be four-inch (4") in diameter unless shown otherwise.

Sub-section A. Extent and Location of Laterals:

New sewer laterals installed to lots shall be located ten-foot (10') uphill of the lowest front property corner. Service laterals shall extend from the sewer main to a point ten-foot (10') beyond the street right-of-way line unless shown or staked otherwise. A two-inch (2") by four-inch (4") by six-foot (6') marker, with the top twelve-inches (12") painted red, shall be installed to clearly mark the end of each lateral line. In addition to the marker, the Developer/Contractor shall station (give a distance) the location of the lateral connection to the main from the nearest downstream manhole. Laterals shall be capped with a cap suitable to withstand test pressure and prevent any leakage into or out of the lateral.

When an existing sewer lateral is encountered along the line and grade of a new pipeline it shall be relocated using appropriate pipe and fittings and graded to insure adequate slope to drain properly. Minimum slope shall be one-quarter-inch (1/4") per foot.

Sub-section B. Excavation and Backfill:

Trench excavation and backfill shall conform to the applicable paragraphs of Division 2 and the bedding requirements of this Division.

Sub-section C. Pipe:

Pipe used for new service laterals shall be PVC Plastic Pipe conforming to ASTM D-3034 SDR 35.

Sub-section D. Connection to Main:

Connection to a new main shall be made using a precast wye or tee installed in the main line at time of installation with a 4-inch PVC adapter or rubber gasket into which the 4-inch PVC lateral is inserted to form a water tight connection. In pipes 12-inches and larger the connection may be made using a cored hole in the pipe and a rubber boot. Recommendations of the manufacturer of the materials used shall be carefully followed.

Connections onto existing sewer mains shall be made with field installed service saddles (gasketed and clamped). All connections by field installed service saddles on existing sewer mains shall be done with a sewer tapping machine and all required fittings and materials. Connections shall be made as shown on the Standard Drawing and at the location specified herein, shown on the improvement drawings or as staked in the field.

Sub-section E. Cover Over Sewer Lateral Lines:

There shall be a minimum of 3 feet of cover over all sewer lateral lines (3'6" minimum at property line.)

Sub-section F. Sewer Clean Outs:

There shall be a maximum distance of 5 feet from the foundation wall to the first exterior clean out with a maximum distance between clean-outs of one hundred (100) feet. There shall be a clean out when a combination of bends is ninety degree (90°) or greater.

Sub-section G. Testing:

The service laterals shall be tested as a part of the sewer main to which they are connected.

Sub-section H. Damage and Repair of Sewers and Appurtenances:

The Developer/Contractor shall be responsible for the protection of existing improvements, and any damage resulting from its operations shall be its sole responsibility.

Damage to the sewers, laterals, or appurtenances shall be repaired by acceptable and approved methods.

DIVISION 4A

PVC PLASTIC PIPE

Section 4A.01 GENERAL:

This section covers the requirements for PVC plastic sewer pipe materials and installation in sanitary sewer, storm drain, and other gravity line construction.

Section 4A.02 PIPE:

PVC gravity sewer pipe and fittings shall conform to ASTM D-3034, for diameters from four-inch (4") to fifteen-inch (15") and ASTM F-679 for eighteen-inch (18") to twenty-seven-inch (27"), with integral bell gasket joints. Rubber gaskets shall be factory installed and conform to ASTM F-477. Pipe shall be made of PVC plastic having a cell classification of 12454A or 13364B (with minimum tensile modulus of 500,000 PSI) as defined in ASTM D-1784 and shall have a SDR of 35 and minimum pipe stiffness of 46PSI according to ASTM test D-2412.

Pipe shall be installed in compliance with ASTM D-2321 and the manufacturer's requirements.

Sub-section A. Minimum Size and Slope Requirements:

In no case shall sanitary sewer mains be less than eight inches in diameter. Sewers shall be laid with uniform slope between manholes. All sewers shall be designed and constructed to give mean velocities of not less than 2 feet per second when flowing full, based on Manning's formula using an n value of .013. Absolute minimum slope allowed shall be those published by the Utah Department of Environmental Quality, Division of Water Quality as Administrative Rules for Design Requirements for Wastewater Collection, Treatment and Disposal System, R317-3, **Table R317-3-2.3 (D)(4) Minimum Slopes**.

Whenever possible the slope should exceed 0.006 ft/ft. The pipe should be sized to meet anticipated hydraulic loads, increasing the pipe size to reduce the minimum slope requirements shall not be allowed. Sewer slopes shall not exceed 0.12 ft/ft, drop manholes shall be used when steeper slopes are needed, drop manholes shall be used to keep line grade below maximum grade allowed.

Section 4A.03 FITTINGS:

Fittings shall be made of PVC plastic conforming to ASTM D-1784 and a cell classification as outlined in ASTM D-3034.

Section 4A.04 PIPE LAYING:

All pipe installation shall proceed upgrade on a stable foundation, with joints closely and accurately fitted. Joints shall be clean and dry, and a joint lubricant as recommended by the pipe supplier shall be applied uniformly to the mating joint surfaces to facilitate easy positive joint closure.

Pipe shall be installed with uniform bearing under the full length of the barrel, with suitable excavations being made to receive pipe bells.

Select material shall be compacted around the pipe to firmly bed the pipe in position. Haunching material (bed to springline) should be carefully worked under the haunches of the pipe and compacted from the pipe to the trench wall or two and one half (2-1/2) pipe diameters on each side of the pipe to ensure support. If adjustment of position of a pipe length is required after being laid, it shall be removed and re-jointed as for a new pipe. When pipe laying is not in progress, the ends of the pipe shall be closed with a tight-fitting stopper to prevent the entrance of foreign material.
In addition to the above requirements, all pipe installation shall rigidly adhere to the specific requirements of the pipe manufacturer.

Section 4A.05 GRAVEL FOUNDATION FOR PIPE:

Wherever the subgrade material does not afford a sufficiently solid foundation to support the pipe and superimposed load, and where groundwater must be drained, the subgrade shall be excavated to such depth as may be necessary and replaced with crushed rock or gravel compacted into place.

Gravel for PVC pipe foundation shall be clean crushed rock or gravel with one hundred percent (100%) passing a one-inch (1") screen and less than five percent (5%) passing a No. 4 sieve.

Section 4A.06 INSTALLATION REQUIREMENTS FOR LINE AND GRADE:

All PVC pipe shall be installed accurately to the defined line and grade with the following limits:

> Variance from established line and grade shall not be greater than one-sixteenth (1/16) inch per inch of pipe diameter in ten feet, and not to exceed one-half inch in ten feet, provided that such variation does not result in a level or reverse sloping invert; provided also that variation in the invert elevation between adjoining ends of pipe, due to non-concentricity of joining surface and pipe interior surfaces, does not exceed one-sixty-fourth (1/64) inch per inch of pipe diameter, or one-half (1/2) inch maximum.

Section 4A.07 PIPE BEDDING:

All pipe sewers and drains shall be protected from lateral displacement and possible damage resulting from impact or unbalanced loading during backfilling operations by being adequately bedded.

A groove shall be excavated in the bottom of the trench to receive the bottom quadrant of the pipe. Before preparing the groove, the trench bottom shall be excavated or filled and compacted to an elevation sufficiently above the grade of the pipe so that, when completed, the pipe will be true to line and grade. Bell holes shall be excavated so that only the barrel of the pipe receives bearing from the trench bottom.

Pipe bedding materials placed at any point below the mid-point of the pipe shall be deposited and compacted in layers not to exceed ten-inches (10") in uncompacted depth. Deposition and compaction of bedding materials shall be done simultaneously and uniformly on both sides of the pipe. Compaction shall be accomplished with hand or mechanical compactors. All bedding materials shall be placed in the trench with hand tools or other approved method in such a manner that they will be scattered alongside the pipe and not dropped into the trench in compact masses. Bedding materials shall be loose earth, free from lumps; sand or gravel, free from rocks larger than one-inch (1") diameter; with all materials free from roots, sod, or other vegetable matter.

In the event trench materials are not satisfactory for pipe bedding, modified bedding will be required. Modified bedding shall consist of placing compacted granular material on each side of and to the level of twelve-inches (12") above the top of the pipe.

Modified bedding material shall be graded as follows: One-hundred percent (100%) passing a one and one-half inch (1-1/2") screen and five percent (5%) passing a No. 4 sieve.

Section 4A.08 TESTS:

The Developer/Contractor will be required to conduct an air test and displacement test in the presence of the Public Works Representative/Engineer or his representative. If these tests prove to be inconclusive, any or all of the other required tests shall be conducted in the presence of the Public Works Representative/Engineer or his representative. Tests shall be performed as follows:

Sub-section A. Displacement Test:

In conducting the displacement test a light will be flashed between manholes or, if the manholes have not as yet been constructed, between the locations of the manholes, by means of a flashlight or by reflecting sunlight with a mirror. If the illuminated interior of the pipe shows broken, misaligned or displaced pipe or other defects, the defects designated by the Public Works Representative/Engineer shall be remedied at the Developer/Contractor's expense.

Sub-section B. Infiltration Test:

The Developer/Contractor shall furnish labor, equipment, and materials, including pumps, and shall assist the Public Works Representative/Engineer in making infiltration tests of the completed sewer before it can be placed into service. The Developer/Contractor shall furnish and install the measuring weirs or other measuring devices. The length of line to be tested at any time shall be subject to the approval of the Public Works Representative/Engineer. The maximum allowable infiltration shall not exceed one-hundred-fifty (150) gallons per inch diameter per mile per twenty-four hours (24 hrs) for all installed sewer pipe. If the quantity of infiltration is in excess of the maximum allowable, the leaking joints shall be repaired to the satisfaction of the Public Works Representative/Engineer at the expense of the Developer/Contractor.

Sub-section C. Exfiltration Test:

The Developer/Contractor shall furnish labor, equipment, and materials, including pumps, and shall assist the Public Works Representative/Engineer in making exfiltration tests of the completed sewer before it can be placed into service. The length of line to be tested at one time shall be limited to the length between adjacent manholes. The maximum allowable exfiltration shall not exceed one-hundred-fifty (150) gallons per inch diameter per mile per 24 hours for all installed sewer pipe. The end of the sewer line which projects into the manhole shall be plugged. The pipe shall then be filled with water from the upper manhole, and the line maintained under a light pressure of four feet (4') of head. The inflow of water necessary to maintain this head shall be recorded as the leakage of the system. If the quantity of exfiltration is in excess of the maximum allowable, the leaking joints shall be repaired to the satisfaction of the Public Works Representative/Engineer at the expense of the Developer/Contractor.

Sub-section D. Air Testing:

The Developer/Contractor or his representative (a qualified firm or individual agreed upon by the Public Works Representative/Engineer and the Developer/Contractor) shall furnish labor, equipment, and materials, including pumps and compressors, and shall perform, in the presence of the Public Works Representative/Engineer, air tests of the completed pipe before it can be placed in service. Each section of sanitary sewer pipeline between manholes shall be tested after all the service laterals (and plugs) have been installed. Each test section shall be pressurized to four (4.0) psi. For the purpose of stabilizing the air pressure in each test section, the four (4.0) psi pressure shall be maintained for a two-minute period. Each test section shall then be re-pressurized to 4.0 psi for a period of four minutes. The test section shall be accepted if, after four minutes, the pressure gauge indicates 3.5 psi or greater. Failure of the Developer/Contractor's testing equipment to properly function shall render the test unacceptable. All faulty sections of pipeline shall be repaired and re-tested until the minimum air testing requirements have been met.

Section 4A.09 MANHOLE CONNECTIONS:

PVC pipe connections to manholes shall be achieved by use of manhole coupling adapters, rubber gaskets, or positive seal gasket system with 300 series nonmagnetic corrosion-resistant steel bands. PVC may not be grouted directly to concrete. Connections shall meet the requirements of Division 5 MANHOLES.

Section 4A.10 SEWER LATERAL CONNECTIONS:

All sewer lateral connections onto new sewer mains shall be made through preformed tee fittings installed in the main line at the time of main line installation.

Connections onto existing sewer mains shall be made with field installed service saddles (gasketed and clamped). All connections by field installed service saddles on existing sewer mains shall be done with a sewer tapping machine and all required fittings and materials. Connections shall be made as shown on the Standard Drawing and at the location specified herein, shown on the improvement drawings or as staked in the field.

Section 4A.11 SEWER SERVICE LATERALS

New service laterals shall be constructed with materials and procedures as specified herein.

Existing service laterals shall be constructed with materials compatible with the existing laterals with appropriate connections for joining the ends of existing laterals.
All laterals shall be four-inch (4") in diameter unless shown otherwise.

Sub-section A. Extent of Laterals and Location of Laterals:

New sewer laterals installed to lots shall be located ten-foot (10') uphill of the lowest front property corner. Service laterals shall extend from the sewer main to a point ten-foot (10') beyond the street right-of-way line unless shown or staked otherwise. A two-inch (2") by four-inch (4") by six-foot (6') marker, with the top twelve-inches (12") painted red, shall be installed to clearly mark the end of each lateral line. In addition to the marker, the Developer/Contractor shall station (give a distance) the location of the lateral connection to the main from the nearest downstream manhole. Laterals shall be capped with a cap suitable to withstand test pressure and prevent any leakage into or out of the lateral.

When an existing sewer lateral is encountered along the line and grade of a new pipeline it shall be relocated using appropriate pipe and fittings and graded to insure adequate slope to drain properly. Minimum slope shall be one-quarter-inch (1/4") per foot.

Sub-section B. Excavation and Backfill:

Trench excavation and backfill shall conform to the applicable paragraphs of Division 2 and the bedding requirements of this Division.

Sub-section C. Pipe:

Pipe used for new service laterals shall be PVC Plastic Pipe conforming to ASTM D-3034 SDR 35.

Sub-section D. Connection to Main:

Connections to the main shall be made as specified in Section 4A.10 SEWER LATERAL CONNECTIONS. Recommendations of manufacturer of the materials used shall be carefully followed.

Sub-section E. Cover Over Sewer Lateral Lines:

There shall be a minimum of 3 feet of cover over all sewer lateral lines (3'6" minimum at property line.)

Sub-section F. Sewer Clean Outs:

There shall be a maximum distance of 5 feet from the foundation wall to the first exterior clean out with a maximum distance between clean-outs of one hundred (100) feet. There shall be a clean out when a combination of bends is ninety degree (90°) or greater.

Sub-section G. Testing:

The service laterals shall be tested as a part of the sewer main to which they are connected.

Sub-section H. Damage and Repairs of Sewers and Appurtenances:

The Developer/Contractor shall be responsible for the protection of existing improvements, and any damage resulting from its operations shall be its sole responsibility.

Damage to the sewers, laterals, or appurtenances shall be repaired by acceptable and approved methods.

Section 4A.12 "GO/NO-GO" MANDREL PROOF TESTING:

Not less than thirty (30) days after installation of the flexible sewer or drain pipe, the Developer/Contractor shall test the buried pipe to insure that ring-deflection of the pipe does not exceed five percent (5%) of the pipe's specified minimum inside diameter (ID). This proof test shall establish that the Developer/Contractor has installed the flexible pipe in full compliance with the Project Specifications thereby providing required pipe/soil structural strength.

The Developer/Contractor, with Inspector present, shall pull a "Go/No-Go" Mandrel, inspected and approved by the Public Works Representative/Engineer, through the full length of installed flexible pipe. The Mandrel shall be fabricated from suitable metal with a minimum of nine (9) properly sized radial fins mounted upon a center pulling shaft. In any case, the Mandrel shall be provided with an odd number of rigidly mounted radial fins. The Mandrel shall be provided with a proof-sizing ring that can demonstrate that the Mandrel's minimum outside diameter (OD) is not less than ninety-five percent (95%) of the specified minimum inside diameter of the installed flexible pipe. The Mandrel shall be pulled by the Developer/Contractor through one hundred percent (100%) of the installed flexible pipe without using mechanical equipment. Failure of the Mandrel to pass through a pipeline shall be deemed evidence of inadequate installation by the Developer/Contractor not in compliance with the Project Specifications.

The Public Works Representative/Engineer may require, if deemed appropriate or necessary, additional proof testing of designated lengths of the buried flexible pipe approximately one year (1 yr.) after installation but prior to the expiration of the Developer/Contractor's Maintenance Bond. The flexible pipeline shall be cleaned adequately prior to performing the "Go/No-Go" Mandrel ring deflection proof test. The Developer/Contractor, with Inspector present, shall pull a Mandrel, approved by the Public Works Representative/Engineer, through the designated length of pipeline without using mechanical equipment. Failure of the Mandrel to pass through the pipeline shall be deemed evidence of inadequate installation by the Developer/Contractor not in compliance with the Project Specifications.

DIVISION 4B

POLYETHYLENE CORRUGATED PIPE

Section 4B.01 GENERAL:

This section covers the requirements for high-density polyethylene corrugated pipe with integrally formed smooth interior for use in storm drains.

Section 4B.02 PIPE:

This specification is applicable to nominal sizes 12 - 36 inch diameter. Requirements for test methods, dimensions, and markings are those found in AASHTO Designation M-294.

Pipe and fittings shall be made of polyethylene compounds that meet or exceed the requirements of Type III, Category 4 or 5, Grade P33 or P34, Class C per ASTM Designation D-1248 with the applicable requirements defined in ASTM D-1248. Clean reworked material may be used.

Minimum parallel plate pipe stiffness values at 5% deflection shall be as follows:

Diameter	Pipe Stiffness*	
12"	45 psi	
15"	42 psi	
18"	40 psi	
24"	34 psi	
30"	28 psi	*Per ASTM Test
36"	22 psi	Method D-2412

The pipe and fittings shall be free of foreign inclusions and visible defects. The ends of the pipe shall be cut squarely and cleanly so as not to adversely effect joining.

The nominal size for the pipe and fittings is based on the nominal inside diameter of the pipe. Corrugated fittings maybe either molded or fabricated by the manufacturer. Fittings produced by manufacturers other than the supplier of the pipe shall not be permitted without the approval of the Project Public Works Representative/Engineer. A manufacturers' certification that the product was manufactured, tested, and supplied in accordance with this specification shall be furnished to the Project Public Works Representative/Engineer upon request.

Pipe installation shall be in accordance with ASTM Recommended Practice D-2321 and the manufacturer's requirements.

Section 4B.03 JOINTS:

Joints shall be made with split couplings, corrugated to match the pipe corrugations, and shall engage a minimum of 6 corrugations for 12" - 24" diameter and 4 corrugations for 30" and 36" diameter pipe.

Section 4B.04 PERFORATIONS:

All perforated pipe used in the construction shall have either circular or slotted perforations. Circular perforations shall not be more that 5/16 in. nor less than 3/16 in. in diameter, and arranged in rows parallel to the axis of the pipe. Perforations shall be 3 in. center-to-center, along rows. The spigot or tongue end shall not be perforated for a length equal to the depth of the socket, or depth of the groove plus 3/4 in. and perforations shall continue at uniform spacing along the entire length of the barrel. There shall be a total of 8 rows for an 18-inch pipe. The rows shall be

spaced over not more than 165 deg of circumference. Rows shall be symmetrically arranged with respect to the intended top of bottom of the pipe.

Slots shall be circumferential in direction, not more than 3/16 in. or less than 1/8 in. in width, and 3 in. long. The slots shall be spaced 6 in. apart. There shall be two rows of slots, spaced 120° apart. The distance from the spigot end, or from the shoulder of the tongue end, to the first pair of slots shall be not more than 1 in. greater than the specified slot spacing, nor less than 1 in. less than the specified slot spacing. Slots shall continue at uniform spacing along the entire length of the barrel.

Section 4B.05 PIPE LAYING:

All pipe installation shall proceed upgrade on a stable foundation, with joints closely and accurately fitted.

Pipe shall be installed with uniform bearing under the full length of the barrel, with suitable excavations being made to receive pipe joints.

Select material shall be compacted around the pipe to firmly bed the pipe in position. Haunching material (bed to springline) should be carefully worked under the haunches of the pipe and compacted from the pipe to the trench wall, or two and one-half
(2-1/2) pipe diameters on each side of the pipe, to ensure support. If adjustment of position of a pipe length is required after being laid, it shall be removed and re-jointed as for a new pipe. When pipe laying is not in progress, the ends of the pipe shall be closed with a tight-fitting stopper to prevent the entrance of foreign material.

In addition to the above requirements, all pipe installation shall rigidly adhere to the specific requirements of the pipe manufacturer.

Section 4B.06 GRAVEL FOUNDATION FOR PIPE:

Wherever the subgrade material does not afford a sufficiently solid foundation to support the pipe and superimposed load, and where groundwater must be drained, the subgrade shall be excavated to such depth as may be necessary and replaced with crushed rock or gravel compacted into place.

Gravel for pipe foundation shall be clean crushed rock or gravel with one hundred percent (100%) passing a one-inch (1") screen and less than five percent (5%) passing a No. 4 sieve.

Section 4B.07 INSTALLATION REQUIREMENTS FOR LINE AND GRADE:

All pipe shall be installed accurately to the defined line and grade with the following limits:

> Variance from established line and grade shall not be greater than one-sixteenth (1/16) inch per inch of pipe diameter in ten feet, and not to exceed one-half inch in ten feet, provided that such variation does not result in a level or reverse sloping invert; provided also that variation in the invert elevation between adjoining ends of pipe, due to non-concentricity of joining surface and pipe interior surfaces, does not exceed one-sixty-fourth (1/64) inch per inch of pipe diameter, or one-half (1/2) inch maximum.

Section 4B.08 PIPE BEDDING:

All pipe sewers and drains shall be protected from lateral displacement and possible damage resulting from impact or unbalanced loading during backfilling operations by being adequately bedded.

A groove shall be excavated in the bottom of the trench to receive the bottom quadrant of the pipe. Before preparing the groove, the trench bottom shall be excavated or filled and compacted to an elevation sufficiently above the grade of the pipe so that, when completed, the pipe will be true to line and grade. Joint holes shall be excavated so that only the barrel of the pipe receives bearing from the trench bottom.

Pipe bedding materials placed at any point below the mid-point of the pipe shall be deposited and compacted in layers not to exceed ten-inches (10") in uncompacted depth. Deposition and compaction of bedding materials shall be done simultaneously and uniformly on both sides of the pipe. Compaction shall be accomplished with hand or mechanical compactors. All bedding materials shall be placed in the trench with hand tools or other approved method in such a manner that they will be scattered alongside the pipe and not dropped into the trench in compact masses. Bedding materials shall be loose earth, free from lumps; sand or gravel, free from rocks larger than one and one-half inch (1-1/2") diameter; with all materials free from roots, sod, or other vegetable matter.

In the event trench materials are not satisfactory for pipe bedding, modified bedding will be required. Modified bedding shall consist of placing compacted granular material on each side of and to the level of twelve-inches (12") above the top of the pipe.

Modified bedding material shall be graded as follows: One-hundred percent (100%) passing a No. 4 sieve and less than five percent (5%) passing a No. 200 sieve.

Section 4B.09 TESTS:

The Developer/Contractor will be required to conduct a displacement test in the presence of the Public Works Representative/Engineer or his representative. If this test prove to be inconclusive, other required tests shall be conducted in the presence of the Public Works Representative/Engineer or his representative. The test shall be performed as follows:

Sub-section A. Displacement Test:

In conducting the displacement test a light will be flashed between manholes or, if the manholes have not as yet been constructed, between the locations of the manholes, by means of a flashlight or by reflecting sunlight with a mirror. If the illuminated interior of the pipe shows broken, misaligned, or displaced pipe or other defects, the defects designated by the Public Works Representative/Engineer shall be remedied at the Developer/Contractor's expense.

Section 4B.10 MANHOLE CONNECTIONS:

Corrugated polyethylene pipe connections to manholes shall be achieved by use of manhole coupling adapters, rubber boots with 300 series nonmagnetic corrosion-resistant steel bands, or grouted directly to concrete.

Section 4B.11 LATERAL CONNECTIONS:

All lateral connections into new sewer mains shall be through preformed tee fittings installed in the main line or with field installed service saddles. All connections by field installed service saddles on new or existing sewer mains shall be done in accordance with manufacturer recommendations and with all required fittings and materials. Connections shall be at the locations shown in the Drawings.

DIVISION 4C

POLYETHYLENE CORRUGATED PIPE WITH WATER TIGHT JOINTS

Section 4C.01 GENERAL:

This section covers the requirements for high density polyethylene corrugated pipe with integrally formed smooth interior for use in storm drains with water tight joints.

Section 4C.02 PIPE:

This specification is applicable to nominal sizes 14 - 18 inch diameter. Requirements for test methods, dimensions, and markings are those found in AASHTO Designation M-252 and M-294 and ASTM F-405 and F-667.

Pipe shall be made of polyethylene compounds that meet or exceed the requirements of Type III, Category 4 or 5, Grade P33 or P34, Class C per ASTM Designation D-1248 with the applicable requirements defined in ASTM D-1248. Clean reworked material may be used.

Minimum parallel plate pipe stiffness values shall be as follows:

Diameter	Pipe Stiffness*	
4"	50 psi	
6"	50 psi	
8"	50 psi	
10"	50 psi	
12"	45 psi	*Per ASTM Test
15"	42 psi	Method D-2412
18"	40 psi	

The pipe and fittings shall be free of foreign inclusions and visible defects. For pipe sizes 12" diameter and greater, holes of any kind in the corrugation crests or sidewalls shall be considered unacceptable. The ends of the pipe shall be cut squarely and cleanly so as not to adversely effect joining.

The nominal size for the pipe and fittings is based on the nominal inside diameter of the pipe. Fittings shall be molded by the manufacturer. Fittings produced by manufacturers other than the supplier of the pipe shall not be permitted.

A manufacturer's certification that the product was manufactured, tested, and supplied in accordance with this specification shall be furnished to the Project Public Works Representative/Engineer upon request.
Pipe installation shall be in accordance with ASTM Recommended Practice D-2321 and the manufacturer's requirements.

Section 4C.03 FITTINGS:

Fittings shall be molded from SDR-35 PVC pipe manufactured in accordance with the applicable requirements defined in ASTM D-3034.

Section 4C.04 PIPE LAYING:

All pipe installation shall proceed upgrade on a stable foundation, with joints closely and accurately fitted.

Pipe shall be installed with uniform bearing under the full length of the barrel, with suitable excavations being made to receive pipe joints.

Select material shall be compacted around the pipe to firmly bed the pipe in position. Haunching material (bed to springline) should be carefully worked under the haunches of the pipe and compacted from the pipe to the trench wall or two and one half (2-1/2) pipe diameters on each side of the pipe to ensure support. If adjustment of position of a pipe length is required after being laid, it shall be removed and re-jointed as for a new pipe. When laying is not in progress, the ends of the pipe shall be closed with a tight-fitting stopper to prevent the entrance of foreign material.

In addition to the above requirements, all pipe installation shall rigidly adhere to the specific requirements of the pipe manufacturer.

Section 4C.05 GRAVEL FOUNDATION FOR PIPE:

Wherever the subgrade material does not afford a sufficiently solid foundation to support the pipe and superimposed load, or where groundwater must be drained, the subgrade shall be excavated to such depth as may be necessary and replaced with crushed rock or gravel compacted into place.

Gravel for pipe foundation shall be clean crushed rock or gravel with one hundred percent (100%) passing a one-inch (1") screen and less than five percent (5%) passing a No. 4 sieve.

Section 4C.06 INSTALLATION REQUIREMENTS FOR LINE AND GRADE:

All pipe shall be installed accurately to the defined line and grade with the following limits:

> Variance from established line and grade shall not be greater than one-sixteenth (1/16) inch per inch of pipe diameter in ten feet, and not to exceed one-half inch in ten feet, provided that such variation does not result in a level or reverse sloping invert; provided also that variation in the invert elevation between adjoining ends of pipe, due to non-concentricity of joining surface and pipe interior surfaces, does not exceed one-sixty-fourth (1/64) inch per inch of pipe diameter, or one-half (1/2) inch maximum.

Section 4C.07 PIPE BEDDING:

All pipe sewers and drains shall be protected from lateral displacement and possible damage resulting from impact or unbalanced loading during backfilling operations by being adequately bedded.

A groove shall be excavated in the bottom of the trench to receive the bottom quadrant of the pipe. Before preparing the groove, the trench bottom shall be excavated or filled and compacted to an elevation sufficiently above the grade of the pipe so that, when completed, the pipe will be true to line and grade. Joint holes shall be excavated so that only the barrel of the pipe receives bearing from the trench bottom.

Pipe bedding materials placed at any point below the mid-point of the pipe shall be deposited and compacted in layers not to exceed ten-inches (10") in uncompacted depth. Deposition and compaction of bedding materials shall be done simultaneously and uniformly on both sides of the pipe. Compaction shall be accomplished with hand or mechanical compactors. All bedding materials shall be placed in the trench with hand tools or other approved method in such a manner that they will be scattered alongside the pipe and not dropped into the trench in compact masses. Bedding materials shall be loose earth, free from lumps; sand or gravel, free from rocks larger than one and one-half inch (1-1/2") diameter; with all materials free from roots, sod, or other vegetable matter.

In the event trench materials are not satisfactory for pipe bedding, modified bedding will be required. Modified bedding shall consist of placing compacted granular material on each side of and to the level of twelve-inches (12") above the top of the pipe.

Modified bedding material shall be graded as follows: One-hundred percent (100%) passing a No. 4 sieve and less than five percent (5%) passing a No. 200 sieve.

Section 4C.08 TESTS:

The Developer/Contractor will be required to conduct an air test and displacement test in the presence of the Public Works Representative/Engineer or his representative. If these tests prove to be inconclusive, any or all of the other required tests shall be conducted in the presence of the Public Works Representative/Engineer or his representative. Tests shall be performed as follows:

Sub-section A. Displacement Test:

In conducting the displacement test a light will be flashed between manholes or, if the manholes have not as yet been constructed, between the locations of the manholes, by means of a flashlight or by reflecting sunlight with a mirror. If the illuminated interior of the pipe shows broken, misaligned or displaced pipe or other defects, the defects designated by the Public Works Representative/Engineer shall be remedied at the Developer/Contractor's expense.

Sub-section B. Infiltration Test:

The Developer/Contractor shall furnish labor, equipment, and materials, including pumps, and shall assist the Public Works Representative/Engineer in making infiltration tests of the completed line before it can be placed into service. The Developer/Contractor shall furnish and install the measuring weirs or other measuring devices. The length of line to be tested at any time shall be subject to the approval of the Public Works Representative/Engineer. The maximum allowable infiltration shall not exceed one-hundred-fifty (150) gallons per inch diameter per mile per twenty-four hours (24 hrs) for all installed pipe. If the quantity of infiltration is in excess of the maximum allowable, the leaking joints shall be repaired to the satisfaction of the Public Works Representative/Engineer at the expense of the Developer/Contractor.

Sub-section C. Ex-filtration Test:

The Developer/Contractor shall furnish labor, equipment, and materials, including pumps, and shall assist the Public Works Representative/Engineer in making ex-filtration tests of the completed line before it can be placed into service. The length of line to be tested at one time shall be limited to the length between adjacent manholes. The maximum allowable ex-filtration shall not exceed one-hundred-fifty (150) gallons per inch diameter per mile per 24 hours for all installed pipe. The end of the line which projects into the manhole shall be plugged. The pipe shall then be filled with water from the upper manhole, and the line maintained under a light pressure of four feet (4') of head. The inflow of water necessary to maintain this head shall be recorded as the leakage of the system. If the quantity of ex-filtration is in excess of the maximum allowable, the leaking joints shall be repaired to the satisfaction of the Public Works Representative/Engineer at the expense of the Developer/Contractor.

Sub-section D. Air Testing:

The Developer/Contractor or his representative (a qualified firm or individual agreed upon by the Public Works Representative/Engineer and the Developer/Contractor) shall furnish labor, equipment, and materials, including pumps and compressors, and shall perform, in the presence of the Public Works Representative/Engineer, air tests of the completed pipe before it can be placed in service. Each section of sanitary sewer pipeline between manholes shall be tested after all the four-inch service laterals (and plugs) have been installed. Each test section shall be pressurized to 4.0 psi. For the purpose of stabilizing the air pressure in each test section, the 4.0 psi pressure shall be maintained for a two-minute period. Each test section shall then be repressurized to 4.0 psi for a period of four minutes. The test section shall be accepted if, after four minutes, the pressure gauge indicates 3.5 psi or greater. Failure of the Developer/Contractor's testing equipment to properly function shall render the test unacceptable. All faulty sections of pipeline shall be repaired and retested until the minimum air testing requirements have been met.

Section 4C.09 MANHOLE CONNECTIONS:

Corrugated polyethylene pipe connections to manholes shall be achieved by use of manhole coupling adapters, rubber boots with 300 series nonmagnetic corrosion-resistant steel bands, or grouted directly to concrete.

Section 4C.10 LATERAL CONNECTIONS:

All lateral connections into new sewer mains shall be through preformed tee fittings installed in the main line or with field installed service saddles. All connections by field installed service saddles on new or existing sewer mains shall be done in accordance with manufacturers recommendations and with all required fittings and materials. Connections shall be at the locations shown in the Drawings.

Section 4C.11 "GO/NO-GO" MANDREL PROOF TESTING:

Not less than thirty (30) days after installation of the flexible sewer or drain pipe, the Developer/Contractor shall test the buried pipe to insure that ring-deflection of the pipe does not exceed five percent (5%) of the pipe's specified minimum inside diameter (ID). This proof test shall establish that the Developer/Contractor has installed the flexible pipe in full compliance with the Project Specifications thereby providing required pipe/soil structural strength.

The Developer/Contractor, with Inspector present, shall pull a "Go/No-Go" Mandrel, inspected and approved by the Public Works Representative/Engineer, through the full length of installed flexible pipe. The Mandrel shall be fabricated from suitable metal with a minimum of nine (9) properly sized radial fins mounted upon a center pulling shaft. In any case, the Mandrel shall be provided with an odd number of rigidly mounted radial fins. The Mandrel shall be provided with a proof-sizing ring that can demonstrate that the Mandrel's minimum outside diameter (OD) is not less than ninety-five percent (95%)
of the specified minimum inside diameter of the installed flexible pipe. The Mandrel shall be pulled by the Developer/Contractor through one-hundred percent (100%) of the installed flexible pipe without using mechanical equipment. Failure of the Mandrel to pass through a pipeline shall be deemed evidence of inadequate installation by the Developer/Contractor not in compliance with the Project Specifications.

The Public Works Representative/Engineer may require, if deemed appropriate or necessary, additional proof testing of designated lengths of the buried flexible pipe approximately one year (1 yr) after installation but prior to the expiration of the Developer/Contractor's Maintenance Bond. The flexible pipeline shall be cleaned adequately prior to performing the "Go/No-Go" Mandrel ring deflection proof test. The Developer/Contractor, with Inspector present, shall pull a Mandrel, approved by the Public Works Representative/Engineer, through the designated length of pipeline without using mechanical equipment. Failure of the Mandrel to pass through the pipeline shall be deemed evidence of inadequate installation by the Developer/Contractor not in compliance with the Project Specifications.

DIVISION 5

MANHOLES

Section 5.01 GENERAL:

This division covers the requirements for manhole materials and installation. Manholes shall be installed at the locations and at the depth shown on the drawings. Manholes shall be furnished complete with cast-iron rings and covers.

Section 5.02 CONCRETE BASE:

Unless otherwise noted manhole bases shall be precast and shall have pipe inverts and a resilient connection between pipe and manhole for each pipe connecting to the manhole.

Where sewer lines pass through or enter manholes, the invert channels shall be smooth and semi-circular in cross section, conforming to the details shown on the Drawings. Changes of direction of flow within the manholes shall be made with a smooth curve with as long a radius as possible. The floor of the manhole outside the flow channels shall be smooth and slope toward the channel at not less than one-half inch (1/2") per foot.

Concrete pipe connections to manholes shall be achieved by use of manhole coupling adapters, rubber gaskets, positive seal gasket system, or grouting a bell or spigot pipe at the appropriate locations. Rubber gaskets or boots shall be made of rubber compound meeting ASTM C-923 Specifications for resilient connections between pipe and manhole. They shall meet all other applicable ASTM specifications, including ASTM F-477.

Positive seal gasket systems boot shall have a wall thickness of three-eighths inch (3/8"). The boot shall either be "cast-in-place" in the precast base or attached to the precast base by means of an internal expanding band. When the boot is attached to the precast base, a watertight seal between the boot and the precast base must be accomplished. An external band (take-up clamp) shall be supplied and used to clamp and seal the boot to the pipe. The band shall be made of 300 series nonmagnetic corrosion-resistant steel. After the band has been placed, it shall be completely coated with a bituminous material approved by the Public Works Representative/Engineer.

PVC pipe connections to manholes shall be achieved by use of manhole coupling adapters, rubber gaskets, or positive seal gasket system. PVC may not be grouted directly to concrete.

The maximum size pipe that can be used in a 48-inch manhole is twenty-four (24") inch PVC or twenty-one (21") inch concrete. For pipes larger than these require a 60-inch manhole or concrete box.

Concrete for manhole bases shall comply with the requirements of Division 8, Concrete, of these Specifications.

Section 5.03 WALL AND CONE SECTIONS:

All manholes shall be precast, sectional, reinforced concrete pipe of forty-eight-inch (48") or sixty-inch (60") diameter as specified. Both cylindrical and taper sections shall conform to all requirements of ASTM Designation C-478-88 (or latest revision) for Precast Reinforced Concrete Manhole Sections with the following exceptions:

1. The throat section of the manhole shall be adjustable, by use of manhole sections, up to forty-eight inches (48") in height.

2. The taper section shall be a maximum of thirty-six inches (36") in height for 48-inch manholes and thirty-nine inches (39") for 60-inch manholes, shall be of eccentric conical design, and shall taper uniformly to thirty inches (30") inside diameter.

3. The pipe used in the base section shall be furnished in section lengths of one, two, three, and four-feet (1, 2, 3, and 4 feet) as required.

All joint surfaces of precast sections and the face of the manhole base shall be thoroughly cleaned and wet prior to setting precast sections. All joints, including grade rings, shall be set in mortar or butyl rubber gasket. The mortar shall consist of one (1) part cement and one and one-half (1-1/2) parts sand with sufficient water added to bring the mixture to workable consistency or the joints shall be sealed with a butyl rubber gasket that is permanently flexible and non-shrinking. All joints shall be water tight and free from appreciable irregularities in the interior wall surface.

Sub-section A. Manholes Shall Be Furnished With Steps:

The steps are to be made of co-polymer polypropylene. The co-polymer polypropylene used shall conform to ASTM D-4101-82 PP200B33450Z02. The steel used in manufacturing of this product shall be a deformed ½" reinforcing rod. This material shall be grade 60 and conform to the requirements of ASTM A-615.

Section 5.04 DROP MANHOLES:

When the difference in elevation of an incoming sewer is 12-inches or greater a drop manhole shall be used. The drop manhole shall be constructed as shown in the Standard Drawings. The piping from the wye to the manhole on both legs shall be ductile iron or PVC pipe with appropriate fittings. If the sewer main that the drop manhole is a part of is concrete, then a transition coupling (Fernco) shall be used to connect the main with the drop pipe assembly.

The drop pipe assembly shall be encased in flowable fill. The flowable fill shall be placed to the minimum thickness as shown on the Standard Drawings.

Sub-section A. Cement:

Use Portland Cement, Type II per Division 8, Portland Cement Concrete.

Sub-section B. Fly Ash:

Supply fly ash that complies with ASTM C-618 Class F except that the loss on ignition must be 3 percent or less.

Sub-section C. Fine Aggregate:

Use natural sand. The sand shall meet the following gradation when tested in accordance with AASHTO T-27.

Fine Aggregate

Sieve Size	Percent Passing
No. 3/4	100
No. 100	0-10

Sub-section D. Mix Design:

The mix design shall meet the following requirements:

- Mix design compressive strength (28 day) – between 50 to 150 psi.
- Portland Cement – at least 50 pounds per cubic yard.
- Fly Ash – at least 300 pounds per cubic yard.
- Slump – 6 to 10 inches maximum.

Section 5.05 MANHOLE RINGS AND COVERS:

All iron casting shall conform to the requirements of ASTM Designation A-48 (Class 35) for grey iron castings, free from blowholes and shrinkage defects. Castings shall be free from fins and burrs and shall be shot-blasted to remove sand and other foreign matter.

Rings and covers shall be equal to the twenty-four inch (24") Standard circular, with machined bearing surfaces, gravity, solid, non-rocking type. The minimum weight of the cover shall be one hundred sixty (160) pounds. The minimum weight of the ring shall be two hundred eighty (280 lbs.). No flat rings and covers shall be allowed. **Each cover shall contain one (1) pick hole but shall not contain air vent holes.** The tops of the cover and ring shall be flush and there shall be 1/8-inch clearance between the cover and the ring. In addition to the foundry name and year of manufacture, the cover shall be marked "SEWER," "STORM DRAIN," "DRAIN," or "IRRIGATION" as appropriate.

Sub-section A. Setting of Manhole Frames and Covers:

Manhole rings shall be set in place in with the shaft in a bed of cement sand mortar, which mix shall be one part cement to two parts sand or Kent Seal. Covers shall be set to the finished grade and contour of the existing street. Rings and covers shall be protected during backfilling and compaction of the soil and during the placing or replacing of road surfaces. Any rings or covers loosened from the manhole sections shall be reset in cement mortar and any rings or covers damaged or broken shall be replace by the Developer/Contractor at its expense. Manholes placed in asphalt surfacing shall be constructed such that the cast iron ring is one-sixteenth inch (1/16") lower than the pavement. Brick shall not be used to raise the manhole. Cones shall not be broken out to lower the ring to meet the road grade. Sections shall be removed and grade rings or adapter rings (riser) used.

Section 5.06 CONNECTIONS TO EXISTING SEWER (NOTE: REFERENCES TO SEWER ARE NOT IN EFFECT UNTIL MENDON CITY HAS A SEWER SYSTEM.):

Manholes used to connect the sewer to the existing sewer shall be plumb and centered on the existing pipe at the elevation designated and the base placed as specified. Care shall be taken not to disturb the alignment of the existing sewer.

The cutting of the existing sewer pipe shall be done in the presence of the Public Works Representative/Engineer. The cut shall be full area of the new pipe and shall be finished so as to leave no projections that will restrict the flow or catch solids.

Every precaution shall be taken to prevent any material from entering the sewer main. Any such materials entering the sewer shall be removed.

Section 5.07 INCOMING SEWER LINES:

In no case shall an incoming sanitary sewer be allowed to drop more that 12-inches to the base. Sewer lines where the grade is higher than 12-inches above the existing base; a drop manhole connection shall be used. In all cases the base shall have a channel for the incoming sewage.

DIVISION 6

VALVES, COUPLINGS, AND FIRE HYDRANTS

Section 6.01 GENERAL:

This section covers distribution valves to be used in the water system, couplings, and fire hydrants.

Section 6.02 RESILIENT SEATED GATE VALVE:

Valves in sizes 4" through 12" shall be of the iron body, non rising bronze stem, resilient seated type, manufactured to equal or exceed all applicable AWWA standards of C-509 latest revision and all specific requirements outlined in these specifications.

1. Valves shall open left and be provided with 2" square operating wrench nuts unless otherwise specified.

2. When valves have Mechanical Joints, they shall be furnished with all necessary glands, followers, and bolts and nuts to complete installation.

3. The disc shall have integrally cast ASTM B-62 bronze stem nut to prevent twisting, binding or angling of the stem. Designs with loose stem nuts are not acceptable.

4. Bronze valve stems shall be interchangeable with stems of the double disc valves of the same size, direction of opening and manufacture.

5. All internal ferrous surfaces shall be coated, holiday free, to a minimum thickness of 4 mills with a two part thermo setting epoxy coating. Said coating shall be non-toxic, impart no taste to the water, formulated from materials deemed acceptable in the Food and Drug Administration Document Title 21 of the Federal Regulations on food additives, Section 121.2514 entitled Resins and Polymeric Coatings. It shall protect all seating and adjacent surfaces from corrosion and prevent build-up of scale or tuberculation.

6. The sealing element shall be secured to the disc with self locking stainless steel screws, and it shall be field replaceable, and shall be such that it cannot be installed improperly.

7. Stem failure from over torquing in either the open or closing position shall occur externally at such a point as to enable the stem to be safely turned by use of a readily available tool after exposure of the valve through excavation.

8. Valve design shall incorporate a positive metal to metal stop to prevent over-compression of the sealing element.

9. A full faced composition gasket placed between machined body and bonnet flanges is required to eliminate cold flow or creep action present with "O" ring gasketed bodies.

10. Valves shall have a test plug in the bonnet area to vent air and allow line pressure testing.

11. The exterior of the valves shall be Asphalt Varnish, JAN-P-450. If exterior epoxy is used, all bolts and nuts shall be made of Stainless Steel to prevent galvanic corrosion of said nuts and bolts due to insulation from the ferrous valve and line.

Section 6.03 BUTTERFLY VALVE:

All butterfly valves shall conform to the latest revision of AWWA Standard C-504, Class 150-B, and comply with the following:

1. Valve bodies shall be cast iron, ASTM A-126 Class B. Body ends shall be flanged with facing and drilling in accordance with ANSI B16.1, Class 125; or mechanical joint in accordance with AWWA C-111. All mechanical joint end valves shall be furnished complete with joint accessories (bolts, nuts, gaskets, and glands). All valves shall conform to AWWA Standard C-504, Table 3, Laying Lengths for Flanged Valves and Minimum Body Shell Thickness for all Body Types.

2. Valve disc shall be ductile iron ASTM A-536, grade 65-45-12. Valve disc shall be of the offset design providing 360 degree uninterrupted seating.

3. The resilient seat shall be natural rubber bonded to an 18-8, Type 304 stainless steel retaining ring secured to the disc by 18-8, Type 304 stainless steel screws. The seat shall be capable of mechanical adjustment in the field and field replaceable without the need for special tools. Valve body seat shall be 18-8, Type 304 Stainless Steel.

4. Valve shafts shall be 18-8, Type 304 stainless steel. Shafts shall be of the two piece stub design and attached to the disc by means of "O" ring sealed taper pins with lock nuts.

5. The valve assembly shall be furnished with a non-adjustable factory set thrust bearing designed to center the valve disc at all times.

6. Shaft bearings shall be contained in the integral hubs of the valve body and shall be self-lubricated sleeve type.

7. Valve shaft seal shall consist of "O" Rings. Where the valve shaft projects through the valve body for actuator connection, the "O" Ring packing seal shall be field replaceable as a part of a removable bronze cartridge.

8. When manual actuators are required they shall be of the traveling nut design capable of withstanding 450 foot pounds of input torque against the open and closed stops. All actuators shall have adjustable mechanical stop limits. The closed position stop shall be externally adjustable. Valves shall be installed with the shaft horizontal unless otherwise directed by the Public Works Representative/Engineer and shall be provided with a 2-inch square operating nut for manually operating the valve with a "T" handle wrench.

9. All valves shall be coated with epoxy in conformance to AWWA Standard C-550, latest revision. Interior wetted ferrous surfaces shall be coated nominal 10 mils thick for long life; and body exterior shall have a minimum of 3 to 4 mils coating thickness in order to provide superior base for field-applied finish coats.

Section 6.04 VALVE BOXES:

All buried valves shall be installed complete with two-piece, cast iron, screw type, 5-1/4-inch shaft valve box with locking lid. The lid shall have the words "Water" or "IRR." cast in the metal depending on the application.

Valves and valve boxes shall be installed where shown on the drawings. Valves and valve boxes shall be set plumb. Valve boxes shall be centered directly over the valve. Valves shall be aligned with property lines where possible. Earth fill shall be carefully tamped around the valve box to a distance of four (4) feet on all sides of the box, or to the undisturbed trench face if less than four (4) feet. Valves shall have the interiors cleaned of all foreign matter before installation. All valve boxes located in streets shall be installed to grade. Valves placed in asphalt surfacing shall be constructed such that the cast iron ring is one-sixteenth inch (1/16") lower than the pavement.

Valve boxes in off-road areas shall extend six (6) inches above grade.

Section 6.05 COUPLINGS:

Couplings shall be equal to the product of Smith-Blair or Dresser with ductile iron couplings being used on all ductile iron and PVC pipe. Couplings shall be of the straight, transition, or reducing style as required by the specific installation. Where the coupling is used to join a ductile iron line to a steel line appropriate transition gaskets will be used. All steel fittings and bolts shall be coated with a non-oxide coating and wrapped with polyethylene.

Section 6.06 FIRE HYDRANTS:

Fire hydrants shall be "traffic model" type designed to conform to AWWA Specification C-502 and shall be of either the compression or toggle joint type. Hydrants shall be Mueller "Super Centurion 200" or Waterous "Pacer".

Hydrant valves shall be a minimum of 6-inch size. Hydrants shall be supplied complete with two 2 1/2-inch hose nozzles and one 4 1/2-inch pumper nozzle. All nozzles shall be provided with National Standard threading. A one cubic yard gravel sump shall be provided at each hydrant. All hydrants shall be mechanical joint end and shall be connected to the main by means of a mechanical joint by flanged tee and flanged by mechanical joint auxiliary gate valve and box as shown on the Standard Drawings. Each hydrant shall also be supplied with O-ring seals, a National Standard pentagon operating nut which is designed for clockwise rotation closing, and a 6-inch mechanical joint inlet.

Section 6.07 BLOWOFF VALVE:

A blow-off valve is required on the culinary system in cul-de-sac's and in temporary dead-end streets. The installation in cul-de-sacs shall be permanent and shall come off the end of the culinary water line. On temporary dead-ended streets the connection shall be made using a main size by three-inch MJ tee.

The blow-off valve shall be an Eclipse Model 85 flow-off hydrant.

DIVISION 7

EARTHWORK

Section 7.01 GENERAL:

This section defines the requirements for excavation and backfill for structures, construction requirements of earth embankments and earth fills, and subgrade preparation required by the Standard Drawings and Specifications.

Section 7.02 EXCAVATION FOR STRUCTURES:

Where suitable subgrade soils exist, structures shall be founded on undisturbed original subsoil. All unauthorized excavation below the specified subgrade shall be replaced with concrete, monolithic with that of the slab above or with coarse gravel thoroughly compacted into place.

Subgrade soils for structures not suitable for proper support shall be replaced with firm, dense, thoroughly compacted and consolidated material free from mud and muck. Coarse gravel or crushed stone may be used for subsoil reinforcement if satisfactory results can be obtained thereby. Such material shall be applied in thin layers, each layer being embedded in the subsoil by thorough tamping. All excess soil shall be removed to compensate for the displacement of the gravel or crushed stone and the finished elevation of any subsoil reinforced in this manner shall not be above the specified subgrade elevation.

Section 7.03 GRANULAR FOUNDATION BORROW:

Granular foundation borrow shall be compacted to not less than 95% of maximum dry density as determined by ASTM D-1557.

Section 7.04 BACKFILL AROUND STRUCTURES:

No backfilling around or behind structures shall be initiated until the concrete is fully cured for **seven days**. Backfill around structures shall be placed to the lines shown on the drawings, or as directed. After completion of foundation footings and walls and other construction below the elevation of the final grades, and prior to backfilling, all forms shall be removed and the excavation shall be cleaned of all trash and debris. Hand compacted fill, including fill compacted by manually-directed power tampers, shall be placed in layers whose thickness before compaction is not greater than four (4) inches. Material for backfilling shall consist of suitable excavated material or imported sand, gravel, or other suitable material with no rocks whose greatest dimension is larger than two (2) inches.

Fill shall be placed in a manner that will prevent damage to the structures and will allow the structures to assume the loads from the fill gradually and uniformly. The height of the fill adjacent to a structure shall be increased at approximately the same rate on all sides of the structure. Each layer shall be compacted by hand or machine tampers or by other suitable equipment to a density equal to 95% of maximum dry density as measured by ASTM D1557.

Section 7.05 CONSTRUCTION OF EMBANKMENTS AND FILLS:

Sub-section A. Foundation Preparation.

Foundations for earth fill shall have unsuitable materials, such as weeds, sod, roots larger than 1/4-inch in diameter, vegetation, or other organic material shall be removed by clearing, stripping, and/or grubbing. Except as otherwise specified, earth foundation surfaces shall be graded to remove surface irregularities and shall be scarified parallel to the axis of the fill or otherwise acceptably scored and loosened to a minimum depth of six inches. The moisture content of the loosened material shall be controlled as specified for the earth fill, and the surface materials of the foundation shall be compacted and bonded with the first layer of earth fill as specified for subsequent layers of earth fill.

Earth abutment surfaces shall be free of loose, uncompacted earth in excess of 2 inches in depth normal to the slope and shall be at such a moisture content that the earth fill can be compacted against them to effect a good bond between the fill and the abutments.

Rock foundation and abutment surfaces shall be cleared of all loose material by hand or other effective means and shall be free of standing water when fill is placed upon them. Occasional rock outcrops in earth foundations for earth fill, except in dams and other structures designed to restrain the movement of water, shall not require special treatment if they do not interfere with compaction of the foundation and initial layers of the fill or the bond between the foundation and the fill.

Sub-section B. Placement.

Fill shall not be placed until the required excavation and foundation preparation have been completed and the foundation has been inspected and approved by the Public Works Representative/Engineer and any Regulatory Agency having authority over the project. Fill shall not be placed upon a frozen surface, nor shall snow, ice, or frozen material be incorporated in the fill.

Fill shall be placed in approximately horizontal layers. The thickness of each layer before compaction shall not exceed the maximum thickness specified. Materials placed by dumping in piles or windrows shall be spread uniformly to not more than the specified thickness before being compacted. Hand compacted fill, including fill compacted by manually-directed power tampers, shall be placed in layers whose thickness before compaction is not greater than four (4) inches. All rock whose greatest dimension is larger than two-inch (2") shall be removed from the material receiving compaction by manually directed power tampers.

Earth fill designed to restrain the movement of water shall be placed so as to meet the following additional requirements:

1. The distribution of materials throughout each zone shall be essentially uniform, and the fill shall be free from lenses, pockets, streaks, or layers of material differing substantially in texture or gradation from the surrounding material.

2. If the surface of any layer becomes too hard and smooth for proper bond with the succeeding layer, it shall be scarified parallel to the axis of the fill, to a depth of not less than 2 inches before the next layer is placed.

3. The top surfaces of embankments shall be maintained approximately level during construction, except that a crown or cross-slope of not less than 2 percent shall be maintained to ensure effective drainage, and except as otherwise specified for drain fill zones. If the Drawings or specifications require or the Public Works Representative/Engineer directs that fill be placed at a higher level in one part of the embankment than another is, the top surface of each part shall be maintained as specified above.

4. Dam embankments shall be constructed in continuous layers from abutment to abutment except where openings to facilitate construction of inlet and outlet pipes are specifically authorized in the contract.

5. Embankments built at different levels as described in 3 and 4 shall be constructed so that the slope of the bonding surfaces between the embankment in place and embankment to be placed is not steeper than 2 feet horizontal to 1-foot vertical. The bonding surface of the embankment in place shall be stripped of all loose material, scarified, moistened and recompacted when the new fill is placed against it. This is needed to ensure a good bond with the new fill, to obtain the specified moisture content and specified density at the junction of the in-place and new fill.

Sub-section C. Borrow

When the embankment or fill exceeds the amount of excavation, sufficient additional material shall be obtained from borrow pits provided by the Developer/Contractor. All material proposed to be imported shall be subject to the review and approval of the Public Works Representative/Engineer prior to starting of hauling operations.

The materials used for embankment and fill construction shall be free from sod, grass, roots larger than 1/4-inch diameter, trash, clods, rocks larger than six inches in diameter, and all other material unsuitable for construction of compacted fills. Rotomilled asphalt meeting the large rock requirement may be used as borrow.

Grading of completed embankments and fills shall bring the surfaces to a smooth, uniform condition with final grades being within 0.1 foot of the design grade.

Section 7.06 COMPACTION OF MATERIALS:

The material shall be deposited in horizontal layers having a thickness of not more than eight-inches (8") prior to being compacted as hereinafter specified. The distribution of materials shall be such that the compacted material will be homogeneous and free from lenses, pockets, or other imperfections.

During placement and compaction of fill, the moisture content of the materials being placed shall be maintained within the specified range, and the moisture content shall be uniform throughout the layers. Discing, blading or other approved methods prior to compaction of the layer shall obtain uniform moisture distribution. The moisture shall be controlled at a level to permit compaction of the fill as specified, but in no case greater or less than two percent plus or minus of the optimum moisture as determined by AASHTO T-99.

The application of water to the fill materials shall be accomplished at the borrow areas insofar as practicable. Water may be applied by sprinkling the materials after placement on the fill, if necessary.

Material that is too wet when deposited on the fill shall either be removed or dried to specified moisture content prior to compaction.

If the top surface of the preceding layer, a foundation or abutment surface in the zone of contact with the fill becomes too dry to permit suitable bond it shall be scarified and moistened by sprinkling to the required moisture content prior to placement of the next layer of fill.

When the material has been conditioned as here in before specified the backfill or embankment shall be compacted to a minimum of 96% of maximum dry density as determined by AASHTO T-99. Densification of earth fill shall be performed by equipment designated solely for that purpose. Each layer of fill shall be compacted as necessary to make the density of the fill matrix not less than the minimum density specified. The fill matrix is defined as the portion of the fill material finer than the maximum particle size used in the compaction test method specified.

Sub-section A. Under Roadways.

Under roadways and extending one foot beyond the proposed curb-line the fill or embankment material shall be compacted to a minimum of 96% of maximum density specified above.

Sub-section B. Under Sidewalks and Driveways.

Under sidewalks and driveways extending one foot each side of the edge of slab the fill or embankment material shall be compacted to a minimum of 96% of maximum density specified above.

7.07 REMOVAL AND PLACEMENT OF DEFECTIVE FILL:

Fill placement at densities lower than the specified minimum density or at moisture contents outside the specified acceptable range of moisture content or otherwise not conforming to the requirements of the specifications shall be reworked to meet the requirements or removed and replaced with acceptable fill. The replacement fill and the foundation, abutment and fill surfaces upon which it is place shall conform to all requirements of this specification for foundation preparation, approval, placement, moisture control and compaction.

DIVISION 8

PORTLAND CEMENT CONCRETE

Section 8.01 GENERAL:

The work shall consist of furnishing, forming, placing, finishing, and curing Portland cement concrete, as required.

Section 8.02 MATERIALS:

Sub-section A.

Portland cement shall be Type II and shall comply with the Standard Specification for Portland Cement, ASTM C-150.

If air-entraining cement is to be used, the Developer/Contractor shall furnish the manufacturers written statement giving the source, amount and brand name of the air-entraining addition.

Cement shall be stored in such a manner as to be protected from weather, dampness or other destructive agents. Cement that is partially hydrated or otherwise damaged will be rejected.

Sub-section B.

Aggregates shall conform to Tentative Specifications for Concrete Aggregates, ASTM C-33 for the specified sizes. Aggregates that fail to meet any requirement may be accepted only when: (1) the specified alternate conditions of acceptance can be proved prior to the use of the aggregates on the job and within a period of time such that no work under the contract will be delayed by the requirements of such proof; or, (2) the specification for concrete expressly contains a provision of special mix requirements to compensate for the effects of the deficiencies.

The potential reactivity of aggregates with the alkalies in cement shall be evaluated by petrographic examination and, where applicable, the chemical method of test, ASTM Designation C 289, or by the results of previous tests or service records of concrete made from similar aggregates from the same source. The standards for evaluating potential reactivity shall be as described in ASTM Specification C-33, Appendix A1.
Aggregates indicated by any of the above to be potentially reactive shall not be used, except under one of the following conditions:

1. Applicable test results of mortar bar tests, made according to ASTM Method C-227, are available which indicate an expansion of less than 0.10 per cent at six months in mortar bars made with cement containing not less than 0.8 per cent alkalies expressed as sodium oxide; or

2. Concrete made from similar aggregates from the same source has been demonstrated to be sound after 3 years or more of service under conditions of exposure to moisture and weather similar to those anticipated for the concrete under these specifications.

Aggregates indicated to be potentially reactive, but within acceptable limits as determined by mortar bar test results or service records, shall be used only with "low alkali" cement, containing less than 0.60 per cent alkalies expressed as sodium oxide.

Aggregate of each class and size shall be stored and handled by methods that prevent segregation of particle sizes or contamination by intermixing with other materials.

Sub-section C.

Water shall be cleaned and free from injurious amounts of oil, salt, acid, alkali, organic matter or other deleterious substances.

Sub-section D.

Air-entraining agent shall be used in all concrete exposed to the weather. The agent shall conform to ASTM Designation C-175 and C-260, except that the relative durability factor in the freezing and thawing test shall be not less than 95.

Sub-section E.

Steel reinforcement shall be free from rust, oil, grease, paint or other deleterious matter.

Steel bars for concrete reinforcement requiring bends shall be deformed billet-steel bars conforming to ASTM Specification A-615, Grade 40 or Grade 60.

Straight steel bars shall be deformed bars conforming to one of the following specifications:

Deformed Billet-Steel Bars for Concrete Reinforcement (Grade 40 or Grade 60) - ASTM Designation A-615.

Rail-Steel Deformed Bars for Concrete Reinforcement (Grade 50 or Grade 60) - ASTM Designation A-616.

Axle-Steel Deformed Bars for Concrete Reinforcement (Grade 40 or Grade 60) - ASTM Designation A-617.

Fabricated Steel bar mats shall conform to the requirements of ASTM Specification A-184.

Welded steel wire fabric reinforcement shall conform to the requirements of ASTM Specification A-185.

Welded deformed steel wire fabric for concrete reinforcement shall conform to the requirements of ASTM Specification A-497.

Cold-drawn steel wire reinforcement shall conform to the requirements of ASTM Specification A-82.

Deformed steel wire for concrete reinforcement shall conform to the requirements of ASTM Specification A-496.

Gages, spacing and arrangement of wires in welded steel wire fabric shall be as defined in ACI Standard 315 of the American Concrete Institute for the specified style designations.

Steel reinforcement stored at the site of the work shall be stored above the ground surface on platforms, skids or other supports and shall be protected from mechanical injury and corrosion.

Sub-section F.

Water-reducing and set-retarding admixtures shall conform to the requirements of ASTM Specification C-494, except that resistance to freezing and thawing shall be determined in all cases, and the minimum relative durability factor shall be 95.

Admixtures shall be Type A, Water-Reducing or Type D, Water-Reducing and Retarding, as defined in ASTM Specification C-494.

When added, in the manner and amount recommended by the manufacturer, to the concrete used on the job, with no change in the cement content or proportions of the aggregates, admixtures shall have the following effects:

Type A or Type D: The water content at the required slump shall be at least 5 per cent less with the admixture than without. The air content shall remain within the range specified, but shall not exceed 8 per-cent in any case.

Type D: The time of initial setting, determined as prescribed in ASTM C-494, shall be from 1 to 3 hours longer with the admixture than without.

Sub-section G.

Curing compound for concrete shall meet the requirements of ASTM Specification C-309.

Unless otherwise specified, the compound shall be Type 2.

All curing compound shall be delivered to the site of the work in the original container bearing the name of the manufacturer and the brand name. The compound shall be stored in a manner to prevent damage to the containers and to protect water-emulsion types from freezing.

Section 8.03 CLASS OF CONCRETE:

For the purpose of practical identification, concrete has been divided into four classes: Class AA(AE), A(AE), B(AE) and C(AE). The specific use for each Class is identified in the Division in which the concrete is used. The symbol (AE) designates air-entrainment. Basic requirements for each class are as follows:

Concrete	Maximum Net Class of Water Content (gallons/bag)	Minimum Cement Content (bags/cu. yd.)	Minimum 28-day Comp. Strength (psi)
AA(AE)	5	6 1/2	4000
A(AE)	6	6	3500
B(AE)	7	5	2500
C(AE)	8	4	2000

Section 8.04 COMPOSITION OF CONCRETE:

Sub-section A.

Aggregates maximum size shall be not larger than one-fifth (1/5) of the narrowest dimension between forms within which the concrete is to be cast, nor larger than three-fourths (3/4) of the minimum clear spacing between reinforcing bars or between reinforcing bars and forms. For un-reinforced concrete slabs, the maximum size of aggregates shall not be larger than one-fourth (1/4) the slab thickness.

Sub-section B.

Water shall be added to the mix to produce concrete with the minimum practicable slump. The slump of mechanically vibrated concrete shall not exceed four-inch (4"). No concrete shall be placed with a slump in excess of five-inch (5").

Sub-section C.

Air-Content for air-entrained concrete shall comply with the following:

Course Aggregate Size (in.)	Air Content (percent)
1 1/2 to 2 1/2	5 ± 1
3/4 or 1	6 ± 1
3/8 or 1/2	7 ± 1

The air-entraining agent shall be added as liquid to the mixing water by means of mechanical equipment capable of accurate measurement and control.

Sub-section D.

Water reducing, set retarding admixtures shall not be used except with previous approval from the Public Works Representative/Engineer and shall in such a case, conform to the standards of materials set forth in the specification.

Section 8.05 DESIGN OF THE CONCRETE MIX:

The proportions of the aggregates shall be such as to produce a concrete mixture that will work readily into the corners and angles of the forms and around reinforcement when consolidated, but will not segregate or exclude free water during consolidation.

Prior to placement of concrete, the Developer/Contractor shall furnish the Public Works Representative/Engineer, for approval, a statement of the materials and mix proportions (including admixtures, if any) it intends to use. The statement shall include evidence satisfactory to the Public Works Representative/Engineer that the materials and proportions will produce concrete conforming to this specification. The materials and proportions so stated shall constitute the "job mix." After the job mix has been reviewed for conformance to specification by the Public Works Representative/Engineer, neither the source, character, grading of the aggregates, the type and brand of cement, nor admixture shall be changed without prior notice to the Public Works Representative/Engineer. If such changes are necessary, no concrete containing such new or altered materials shall be placed until the Public Works Representative/Engineer has approved a revised job mix.

Section 8.06 OBSERVATION AND TESTING:

The Public Works Representative/Engineer shall have free entry to the plant and equipment furnishing concrete under the contract. Proper facilities shall be provided for the Public Works Representative/Engineer to observe the materials, equipment and processes and to obtain samples of the concrete. All tests and observations will be conducted so as not to interfere unnecessarily with manufacture and delivery of the concrete.

Section 8.07 HANDLING AND MEASUREMENT OF MATERIALS:

Materials shall be stockpiled and batched by methods that will prevent segregation or contamination of aggregates and insure accurate proportioning of the ingredients of the mix.

Except as otherwise provided in Division 8, cement and aggregates shall be measures as follows:

Cement shall be measured by weight or in bags of 94 pounds each. When cement is measured in bags, no fraction of a bag shall be used unless weighed.

Aggregates shall be measured by weight. Mix proportions shall be based on saturated, surface-dry weights. The batch weight of each aggregate shall be the required saturated, surface-dry weight plus the weight of surface moisture it contains.

Water shall be measured by weight, to accuracy within one per cent of the total quantity of water required for the batch.

Admixtures shall be measured within a limit of accuracy of 3 per cent.

Section 8.08 MIXERS AND MIXING:

Concrete shall be uniform and thoroughly mixed when delivered to the work. Variations in slump of more than 1 inch within a batch will be considered evidence of inadequate mixing and shall be corrected by increasing mixing time or other means. For stationary mixers, the mixing time after all cement and aggregates are in the mixer drum shall be not less than 1 1/2 minutes. When concrete is mixed in a truck mixer, the number of revolutions of the drum or blades at mixing speed shall be not less than 70 or more than 100.

Unless otherwise specified, volumetric batching and continuous mixing at the construction site will be permitted if approved by Public Works Representative/Engineer. The batching and mixing equipment shall conform to the requirements of ASTM Specification C-685 and shall be demonstrated prior to placement of concrete, by tests with the job mix, to produce concrete meeting the specified proportioning and uniformity requirements. Concrete made by this method shall be produced, inspected, and certified in conformance with Sections 6, 7, 8, 13, and 14 of ASTM Specification C-685.
No mixing water in excess of the amount called for by the job mix shall be added to the concrete during mixing or hauling or after arrival at the delivery point.

Section 8.09 FORMS:

Forms shall be of wood, plywood, steel or other approved material and shall be mortar tight. The forms and associated falsework shall be substantial and unyielding and shall be constructed so that the finished concrete will conform to the specified dimensions and contours. Form surfaces shall be smooth and free from holes, dents, sags or other irregularities. Forms shall be coated with a non-staining form oil before being set into place.

Metal ties or anchors within the forms shall be equipped with cones, she-bolts or other devices that permit their removal to a depth of at least one inch without injury to the concrete.

All edges that will be exposed to view when the structure is completed shall be chamfered by placing molding in the forms, unless finishing with molding tools.

Section 8.10 PREPARATION OF FORMS AND SUBGRADE:

Prior to placement of concrete the forms and subgrade shall be free of chips, sawdust, debris, water, ice, snow, extraneous oil, mortar, or other harmful substances or coatings. Any oil on the reinforcing steel or other surfaces required to be bonded to the concrete shall be removed. Rock surfaces shall be cleaned by air-water cutting, wet sandblasting or wire brush scrubbing, as necessary, and shall be wetted immediately prior to placement of concrete. Earth surfaces shall be firm and damp. Placement of concrete on mud, dried earth or uncompacted fill or frozen subgrade will not be permitted.

Unless otherwise specified, when concrete is to be placed over drain fill, the contact surface of the drain fill shall be covered with a layer of asphalt-impregnated building paper or polyvinyl sheeting prior to placement of the concrete. Forms for weepholes shall extend through this layer into the drain fill.

Items to be embedded in the concrete shall be positioned accurately and anchored firmly.
Weepholes in walls or slabs shall be formed with nonferrous materials.

Section 8.11 CONVEYING:

Concrete shall be delivered to the site and discharged into the forms within 1 1/2 hours after the introduction of the cement to the aggregates. In hot weather or under conditions contributing to quick stiffening of the concrete, the time between the introduction of the cement to the aggregates and discharge shall not exceed 45 minutes. The Public Works Representative/Engineer may allow a longer time, provided the setting time of the concrete is increased a corresponding amount by the addition of an approved set-retarding admixture. In any case, concrete shall be conveyed from the mixer to the forms as rapidly as practicable by methods that will prevent segregation of the aggregates or loss of mortar.

Concrete shall not be dropped more than five feet vertically unless suitable equipment is used to prevent segregation.

Section 8.12 PLACING:

Concrete shall not be placed until the subgrade, forms and steel reinforcement have been inspected and approved. No concrete shall be placed except in the presence of the Public Works Representative/Engineer. The Developer/Contractor shall give 48-hour notice to the Public Works Representative/Engineer each time it intends to place concrete. Such notice will give the Public Works Representative/Engineer adequate time to inspect the subgrade, forms, steel reinforcement and other preparations for compliance with the specifications before concrete is delivered for placing.

The concrete shall be deposited as closely as possible to its final position in the forms and shall be worked into the corners and angles of the forms and around all reinforcements and embedded items in a manner to prevent segregation of aggregates or excessive laitance. Unless otherwise specified, slab concrete shall be placed to design thickness in one continuous layer. Formed concrete shall be placed in horizontal layers not more than 20 inches thick. Hoppers and chutes, pipes or "elephant trunks" shall be used as necessary to prevent splashing of mortar on the forms and reinforcing steel above the layers being placed.

Immediately after the concrete is placed in the forms, it shall be consolidated by spading, hand tramping or vibration as necessary to insure smooth surfaces and dense concrete. Each layer shall be consolidated to insure monolithic bond with the preceding layer. If the surface of a layer of concrete in place sets to the degree that it will not flow and merge with the succeeding layer when spaded or vibrated, the Developer/Contractor shall discontinue placing concrete and shall make a construction joint according to the procedure specified.

If placing is discontinued when a incomplete horizontal layer is in place, the unfinished end of the layer shall be formed by a vertical bulkhead.

Section 8.13 CONSTRUCTION JOINTS:

Construction joints shall be made at the locations shown on the Drawings. If construction joints are needed which are not shown on the Drawings, they shall be placed in locations approved by the Public Works Representative/Engineer.

Where a featheredge would be produced at a construction joint, as in the top surface of a sloping wall, an inset form shall be used so that the resulting edge thickness on either side of the joint is not less than six-inches (6").

In walls and columns, as each lift is completed, the top surfaces shall be immediately and carefully protected from any condition that might adversely affect the hardening of the concrete.

Steel tying and form construction adjacent to concrete in place shall not be started until the concrete has cured at least 12 hours. Before new concrete is deposited on or against concrete that has hardened, the forms shall be retightened. New concrete shall not be placed until the hardening concrete has cured at least 12 hours.

Surfaces of construction joints shall be cleaned of all unsatisfactory concrete, laitance, coatings or debris by washing and scrubbing with a wire brush or wire broom or by other means approved by the Public Works Representative/Engineer. The surfaces shall be kept moist for at least one hour prior to placement of the new concrete.

Section 8.14 EXPANSION AND CONTRACTION JOINTS:

Expansion and contraction joints shall be made only at locations shown on the drawings.

Exposed concrete edges at expansion and contraction joints shall be carefully tooled or chamfered, and the joints shall be free of mortar and concrete. Joint filler shall be left exposed for its full length with clean and true edges.

Preformed expansion joint filler shall be held firmly in the correct position as the concrete is placed.

Open joints, when specified, shall be constructed by the insertion and subsequent removal of a wooden strip, metal plate or other suitable template in such a manner that the corners of the concrete will not be chipped or broken. The edges of open joints shall be finished with an edging tool prior to removal of the joint strips.

Section 8.15 WATERSTOP:

Waterstops shall be held firmly in the correct position as the concrete is placed. Joints in metal waterstops shall be soldered, brazed or welded. Joints in rubber or plastic waterstops shall be cemented, welded or vulcanized as recommended by the manufacturer.

Section 8.16 REMOVAL OF FORMS:

Forms shall not be removed without the approval of the Public Works Representative/Engineer. Forms shall be removed in such a way as to prevent damage to the concrete. Supports shall be removed in a manner that will permit the concrete to take the stresses due to its own weight uniformly and gradually.

Section 8.17 FINISHING FORMED SURFACES:

Immediately after the removal of the forms:

A. All fins and irregular projections shall be removed from exposed surfaces.

B. On all surfaces, the holes produced by the removal of form ties, cone-bolts, and she-bolts shall be cleaned, wetted and filled with a dry-pack mortar consisting of one part Portland cement, three parts sand that will pass a No. 16 sieve, and water just sufficient to produce a consistency such that the filling is at the point of becoming rubbery when the material is solidly packed.

Section 8.18 FINISHING UNFORMED SURFACES:

All exposed surfaces on the concrete shall be accurately screeded to grade and then float finished, unless specified otherwise.

Excessive floating or troweling of surfaces while the concrete is soft will not be permitted.

The addition of dry cement or water to the surface of the screeded concrete to expedite finishing will not be allowed.

Joints and edges on unformed surfaces that will be exposed to view shall be chamfered or finished with molding tools.

Section 8.19 CURING AND PROTECTION:

Concrete shall be prevented from drying for a curing period of at least 7 days after it is placed. Exposed surfaces shall be kept continuously moist for the entire period, or until curing compound is applied as specified below. Sprinkling, flooding or fog spraying shall maintain moisture or by covering with continuously moistened canvas, cloth mats, straw, sand or other approved material. Wood forms (except plywood) left in place during the curing period shall be kept wet. Formed surfaces shall be thoroughly wetted immediately after forms are removed and shall

be kept wet until patching and repairs are completed. Water or covering shall be applied in such a way that the concrete surface is not eroded or otherwise damaged.
As soon as the concrete has hardened sufficiently to prevent damage, the finished surface shall be protected for curing one of the following ways:

1. Ponding of water on the surface or continuous sprinkling.

2. Application of absorptive mats such as three-inches (3") of cured hay, clean straw or fabric kept continuously wet.

3. Application of two-inches (2") of moist earth or sand uniformly distributed on the surface and kept saturated by spraying with water.

4. Application of light colored waterproof plastic materials, conforming to "Specifications for Waterproof Sheet Materials for Curing Concrete" ASTM C-171, placed and maintained in contact with the surface of the concrete.

5. Application of a curing compound, conforming to "Specifications for Liquid Membrane - Forming Compounds for Curing Concrete" ASTM C-309. The compound shall be light in color and shall be applied in accordance with the manufacturers recommendations immediately after any water sheen, which may develop after finishing, has disappeared from the concrete surface.

Curing compound shall not be applied to surfaces requiring bond to subsequently placed concrete, such as construction joints, shear plates, reinforcing steel and other embedded items. If the membrane is damaged during the curing period, the damaged area shall be re-sprayed at the rate of application specified above.

Section 8.20 REMOVAL OR REPAIR:

When concrete is honey combed, damaged or otherwise defective, the Developer/Contractor shall remove and replace the structure or structural member containing the defective concrete or, where feasible, correct or repair the defective concrete. Prior to starting repair work the Developer/Contractor shall obtain the Public Works Representative/Engineer's approval of its plan for effecting the repair. The Developer/Contractor shall perform all repair work in the presence of the Public Works Representative/Engineer.

Section 8.21 CONCRETING IN COLD WEATHER:

Concrete shall not be mixed nor placed when the daily minimum atmospheric temperature is less than 40 degrees unless facilities are provided to prevent the concrete from freezing. The use of accelerators or antifreeze compounds will not be allowed.

Section 8.22 CONCRETING IN HOT WEATHER:

The Developer/Contractor shall apply effective means to maintain the temperature of the concrete below 90 degrees during mixing, conveying and placing.

DIVISION 9

REINFORCING STEEL

Section 9.01 GENERAL:

Furnish and place reinforcing steel and reinforcing steel (epoxy-coated). Use deformed billet-steel bars as specified. All reinforcing bars shall be Grade 40 or Grade 60 as required. Wire Fabric shall conform to ASTM A185-70.

Before supply of steel, the Developer/Contractor shall provide all order lists and bending diagrams for approval of the Public Works Representative/Engineer. The approval of such lists and diagrams shall in no way relieve the Developer/Contractor of responsibility for the correctness of reinforcing supplied and all expenses incidental to revision of furnished reinforcing steel shall be carried by the Developer/Contractor.

Section 9.02 FABRICATION AND PLACING REINFORCEMENT:

Sub-section A. Fabrication:

Reinforcement shall be cold bent to the shapes shown in accordance with ACI 1977 Standard Code(ACI 318-77)Chapter 7 Section 7.1.

Sub-section B. Clearances:

All bars shall be of the size specified and shall be placed in the positions shown on the Drawings in such a manner as to be firmly held during the placing of the concrete. Where not otherwise indicated, minimum clearance and cover as required by the ACI Code, Section 7.7 shall be maintained.

Reinforced Clearances	Minimum Cover Inches
Cast In Place Concrete (Non Prestressed)	
Concrete cast against and permanently exposed to earth	3
Concrete exposed to earth or weather:	
No. 6 through No. 18 Bar	2
No. 5 Bar, W31 or D31 wire, and smaller	1 1/2
Concrete not exposed to weather or in contact with ground:	
- Slabs, Walls, and Joists:	
No. 14 and no. 18 Bar	1 1/2
No. 11 Bar and smaller	3/4
- Beams, Columns:	
Primary reinforcements, ties, stirrups, spirals	1 1/2
- Shells, Folded Plate Members:	
No. 6 Bar and larger	3/4
No. 5 Bar, W31 or D31 wire, and smaller	1/2

Reinforcement Clearances	Minimum Cover Inches
Precast Concrete (Manufactured Under Plant Controlled Conditions)	
Concrete exposed to earth or weather:	
- Wall Panels:	
No. 14 and No. 18 Bars	1 1/2
No. 11 Bar and smaller	3/4
-Other Members:	
No. 14 and No. 18 Bars	2
No. 6 through No. 11 Bars	1 1/2
No. 5 Bar, W31 or D31 wire, and smaller	1 1/4
Concrete not exposed to weather or in contact with ground:	
- Slabs, Walls, Joists:	
No. 14 and No. 18 Bars	1 1/4
No. 11 Bar and smaller	5/8
- Beams, Columns:	
Primary reinforcement	1 1/2
Ties, stirrups, spirals	3/8
- Shells, folded plate members:	
No. 6 Bar and larger	5/8
No. 5 Bar, W31 or D31, and smaller	3/8

Sub-section C. Support:

Bars shall be tied at all intersections except where the spacing is less than twelve inches (12") where alternate intersections shall be tied. Distance from supports shall be by means of ties, hangers, or other approved supports. Metal chairs of approved design shall be used to hold reinforcement from contact with the forms. Metal chairs that are in contact with the exterior surface of the concrete shall be galvanized. Layers of bars or when placing concrete directly on a prepared subgrade reinforcing shall be separated by precast mortar blocks or by other equally suitable devices. The use of stones, pieces of broken brick, metal pipe, or wooden blocks shall not be permitted. Reinforcement in any member shall be placed and then inspected and approved by the Public Works Representative/Engineer before the placement of concrete begins. Concrete placed in violation of this provision may be rejected in which case removal will be required.

If the fabric reinforcement is shipped in rolls, it shall be straightened into flat sheets before being placed.

Sub-section D. Splicing:

All splices shall be staggered so that splices in adjacent bars shall be not less than four feet (4') apart, and shall conform to ACI Code Section 12.15.

Section 9.03 EPOXY COATING:

Sub-section A. Prequalify all Coatings:

Ensure that epoxy coating applicator has Concrete Reinforcing Steel Institute (CRSI) fusion bonded epoxy coating applicator plant certification. Furnish a copy of the Prequalification Test Report to the Public Works Representative/Engineer. Provide an 8-ounce sample of the coating material from each batch.

Sub-section B. Coat Bars as Specified:

The following requirements shall be followed:

- Maintain the coating thickness between 8 and 12 mils.
- Coat bars after bending, unless the fabricator can show that satisfactory results can be obtained by coating before bending
- Reject any bent bars with visible cracks or damage in the coating.

Sub-section C: Handling:

Do not damage the bars or the coating during handling and storage.

- Use systems with padded contact areas when handling coated bars.
- Pad all bundling bands.
- Lift all bundles with strong back, multiple supports, or a platform bridge.
- Do not drop or drag bars.
- Repair damaged bars or coating at no additional cost to the Owner.
- Use patching material per manufacturer's recommendation to repair damaged coating.
- Have the coated bars inspected for damage to the coating after the bars are in place and immediately before concrete placement.
- Repair all visible defects using the specified patching or repair material.

Section 9.04 FIELD CUTTING:

Sub-section A. Cutting:

Saw or shear epoxy-coated bars that are specified to be cut in the field. Do not flame cut.

Sub-section B. Repairing:

Repair the sawed or sheared end using the specified patching or repair material.

DIVISION 10

RESTORATION OF SURFACE IMPROVEMENTS

Section 10.01 GENERAL:

The Developer/Contractor shall be responsible for the protection and the restoration or replacement of any improvements existing on public or private property at the start of work or placed there during the progress of the work.

Existing improvements shall include but not to be limited to permanent surfacing, curbs, gutters, sidewalks, planted areas, ditches, driveways, culverts, fences, and walls. All improvements shall be reconstructed to equal or better, in all respects, than the existing improvements removed.

Section 10.02 FIELD VERIFICATION OF IMPROVEMENTS:

In submitting a bid, the Developer/Contractor will be deemed to have carefully examined the site of the work and to have acquainted itself with all conditions relating to the protection and restoration of existing improvements. The Public Works Representative/Engineer does not guarantee that all improvements are shown on the Drawings, and it shall be the Developer/Contractor's responsibility to provide in its bid for the protection and restoration of all existing improvements whether or not each is provided for specifically on the Drawings and/or Bid Form.

Section 10.03 REMOVAL OF PAVEMENT, SIDEWALKS, CURBS, ETC.:

The pavement, sidewalk, curb and gutter, driveway, etc. shall be cut vertically along the lines forming the trench, or nearest full joint, in such a manner as to not cause damage to adjoining pavement, sidewalk, curb and gutter, driveway, etc. An undercut level at the rate of one inch (1") per foot of thickness or an underlap joint will be provided at the proposed junction between old and new surfaces. The portion to be removed shall be broken up in a manner that will not cause damage to the pavement or concrete outside the limits of the trench; however, any pavement damaged by operations outside the limits of the trench shall be replaced at the Developer/Contractor's expense. Broken paving materials shall be removed immediately from the site of the work.

Section 10.04 MATERIALS:

Materials used for repair or replacement of surface improvements shall be equal to or better than the material removed

Sub-section A. Untreated Base Course.

Untreated base course shall comply with the requirements of Division 11, Section 11.08, Base Course. The Public Works Representative/Engineer shall take samples of the untreated base course on a random basis. All materials not meeting the tolerance requirements shall be removed from the project and replaced with specification material.

Sub-section B. Bituminous Surface Course.

The bituminous surface shall be hot-rolled plant mix in accordance with Division 11, Section 11.09, Bituminous Asphalt Cement Pavement.

Sub-section C. Concrete.

Concrete shall comply with Division 8 of these Standard Specifications. Concrete shall be Class AA(AE).

Section 10.05 RESTORING BITUMINOUS, CONCRETE, OR ASPHALT STREET SURFACES:

Where trenches are in or cross bituminous or concrete surfaced roads, traffic lanes, driveways, parking areas, etc., the bituminous or concrete surface shall be cut, restored as quickly as there is sufficient quantity to make it practical, weather permitting, and maintained as follows:

Sub-section A. Before Excavation.

All existing asphalt or concrete surfaces shall be saw cut or roto-milled to a square edge before excavation.

Sub-section B. Temporary Graded Surface.

Until resurfacing can be done in paved areas a temporary gravel surface shall be placed deep enough to provide a minimum of eight inches (8") below the bottom of the bituminous surface and shall be brought flush with the paved surface.

The untreated base shall be placed in the trench at the time it is backfilled. Excess material shall be removed from the premises immediately. The Developer/Contractor will maintain the temporary gravel surface until the asphalt is placed.

Sub-section C. Preparation for Paving.

The area over trenches to be resurfaced shall be graded and rolled with a roller weighing not less than 12 tons, or with the rear wheels of a five-yard truck loaded to capacity, until the subgrade is firm and unyielding. Mud or other soft or spongy material shall be removed and the void filled with gravel and rolled and tamped thoroughly in layers not exceeding six inches in thickness. The edges of trenches, which are broken down during the making of subgrade, shall be removed and trimmed neatly before resurfacing.

Before any permanent resurfacing is placed, the Developer/Contractor shall trim the existing paving to clean straight lines as nearly parallel to the centerline of the trench as practicable. Said straight lines shall be thirty feet minimum lengths and no deviations from such lines shall be made except as specifically permitted by the Public Works Representative/Engineer.

Existing bituminous paving shall be saw cut or roto-milled back a minimum of six inches beyond the limits of any excavation or cave-in along the trench so that the edges of the new paving will rest on at least six-inches (6") of undisturbed soil.

Sub-section D. Bituminous Surface.

The bituminous surface over trenches shall be restored by standard paving practices to a minimum thickness of three inches (3"). Gradation of aggregate shall conform to the 3/4-inch gradation limits as defined in the Standard Specifications for Road and Bridge Construction.

Pavement restoration shall include priming of pavement edges with Type MC-70 bituminous material and placing rolled plant hot mix bituminous material to the level of the adjacent pavement surfaces.

Section 10.06 GRAVEL SURFACE:

Where trenches are excavated through gravel-surfaced areas such as roads and shoulders, parking areas, unpaved driveways, etc., the gravel surface shall be restored and maintained as follows:

Sub-section A.

The gravel shall be placed deep enough to provide a minimum of six inches of material.

Sub-section B.

The gravel shall be placed in the trench at the time it is backfilled. The surface shall be maintained by blading, sprinkling, rolling, adding gravel, etc., to maintain a safe, uniform surface. Excess material shall be removed from the premises immediately.

Sub-section C.

Material for use on gravel surfaces shall be obtained from sound, tough, durable gravel or rock meeting the following requirements for gradation:

Passing 1-inch sieve	100%
Passing 1/2-inch sieve	79-91%
Passing No. 4 sieve	49-61%
Passing No. 16 sieve	27-35%
Passing No. 200 sieve	7-11%

Section 10.07 MISCELLANEOUS IMPROVEMENTS:

It shall be the Developer/Contractor's responsibility to restore to their original condition all irrigation canals, levees, culverts, gates, fences, drainage ditches, and all such improvements which are cut or disturbed during construction. Topsoil in farming areas or along road edges shall be stored separate from subsoil during pipe trench excavation. Topsoil shall be replaced during backfill operations as nearly as possible to its original condition, thereby assuring suitable soil for reseeding.

Section 10.08 RESTORATION OF SURFACES:

Unless otherwise directed, all street surfacing, curbs, gutters, sidewalks, driveways, or other hard surface that must be removed in the performance of the work shall be restored in kind by the Developer/Contractor in accordance with the Specifications contained herein. Deviation of more than one-fourth inch (1/4") between old and new work or within new construction shall be corrected. Such measurement shall be made from a ten-foot (10') minimum length straight edge. Adjoining surfaces between old and new must be flush.

Section 10.09 CLEANUP:

At the completion of each area of work all equipment, barricades, and similar items shall be removed from the area. All excess material will be removed. All rocks larger than two inches (2") shall be removed from the surface. Adjacent borrow pits and road shoulders used for storage of excavating materials will be smoothed and returned to its original contour.

Section 10.10 PAVEMENT MARKINGS:

The Developer/Contractor shall be responsible for restoration of pavement markings on all City and/or County roadways. Restoration of pavement markings shall conform to the applicable local and state specifications.

On roadways under UDOT jurisdiction temporary pavement markings shall be provided for any removed or obliterated markings. The temporary markings shall conform to UDOT standards and specifications. Permanent pavement markings will be replaced by UDOT.

DIVISION 11

ROADWAY CONSTRUCTION

Section 11.01 GENERAL:

This Division covers roadway construction. Work shall consist of pulverizing existing asphalt, earthwork, roadway excavation, 6-inch curb walls, 24-inch curb and gutter, 6-foot monolithic curb gutter and sidewalk, and drive approaches. It will also include imported granular borrow, curb face inlet boxes including connection to existing storm drain, subgrade preparation, untreated base course, asphalt surface and raising manholes and valve boxes to grade.

Section 11.02 PULVERIZING:

The Developer/Contractor shall pulverize the existing asphalt and roadbase to a depth of 6 to 8 inches. The limits of the area to be pulverized will be as shown on the improvement drawings. This material will be used for granular borrow or untreated roadbase. The Developer/Contractor has the option of methods he feels will result in the least work and best product in breaking up the existing asphalt, provided that the maximum size for a single piece of asphalt does not exceed 3-inches. Placing, grading and compacting of this material shall comply with the requirements of borrow or roadbase. The existing asphalt edges where the pulverizing terminates shall be saw cut following or prior to being pulverized.

Section 11.03 EARTHWORK:

The earthwork needed for roadway construction shall meet the requirements of Division 7, Earthwork.

Section 11.04 ROADWAY EXCAVATION:

Following completion of the curb and gutter improvements the roadway between lip of gutters shall be excavated to the lines and grades shown on the improvements drawings. Materials not suitable for use as granular borrow or roadbase shall be removed from the road section. Excavation may be done on one-half of the road at a time.

Section 11.05 SUBGRADE PREPARATION:

This work shall consist of the shaping and compacting of the subgrade in accordance with these specifications and in conformity with the lines, grades, and typical cross sections shown on the Drawings or as established by the Public Works Representative/Engineer.

Following roadway excavation the subgrade shall be proof rolled by running moderate-weight rubber tire-mounted construction equipment uniformly over the surface at least twice. During the rolling operation moisture content of the subgrade layer shall be maintained at not less than 97% or more than 105% of the optimum moisture content. Rolling shall be continued until the entire roadbed is compacted to the specified density to a minimum depth of 8 inches.

Section 11.06 GRANULAR BORROW:

Granular borrow (foundation or roadway) material shall consist of well graded granular bank run natural aggregate material with a maximum size of 3 inches and less than 15% passing a No. 200 sieve. The material shall meet the following gradation:

Sieve Size	Percent Passing
No. 10	50 max.
No. 40	30 max.
No. 200	15 max.

The granular borrow material shall be compacted to not less than 96% maximum dry density as determined by AASHTO T-99. Granular foundation borrow shall be compacted to not less than 95% of maximum dry density as

determined by ASTM D-1557. Surfaces shall be true to the established grade with thickness being not less than 1/4-inch from the required layer thickness and with the surface elevation varying not more than 3/8-inch in ten feet from the true profile and cross section.

Section 11.07 GRANULAR BACKFILL BORROW:

Granular backfill borrow shall be free draining natural aggregate material meeting the following gradation:

Sieve Size	Percent Passing
1 - ½ inch	100
1 inch	95-100
½ inch	25-60
No. 4	0-10

Section 11.08 BASE COURSE:

Base for all streets shall consist of select material, either natural aggregate or crushed slag, and shall be graded as follows:

Sieve Size	Percent Passing
3/4 inch	100
3/8 inch	78-92
No. 4 sieve	55-67
No. 16 sieve	28-38
No. 200 sieve	7-11

Slag 4133 (3/4 inch minus) and slag 4120 (3/4 inch minus) can be used.

The material shall be deposited and spread in a uniform layer, without segregation of size, with such depth that when compacted the layer will have the required thickness as stated below.
Each layer shall be compacted for the full width and depth. Alternate blading and rolling will be required to provide a smooth, even and uniformly compacted course true to cross section and grade. Places inaccessible to rolling shall be compacted with mechanically operated hand tampers.

The gravel base shall be compacted to not less than 96% maximum dry density as determined by AASHTO T-180. Surfaces shall be true to the established grade with thickness being not less than 1/4-inch from the required layer thickness and with the surface elevation varying not more than 3/8-inch in ten feet from the true profile and cross section.

Section 11.09 BITUMINOUS ASPHALT CEMENT PAVEMENT:

Over the dry, dust-free compacted base course the Developer/Contractor shall place and compact a bituminous asphalt cement surface course. The surface course shall consist of a mixture of mineral aggregate and binder. Gradation of aggregate shall conform to the following:

Sieve Size	Percent Passing
3/4 inch	100
3/8 inch	69-91
No. 4	42-58
No. 16	17-31
No. 50	9-21
No. 200	4-8

The Developer/Contractor shall establish a mix gradation, and the amount of bituminous material shall be subject to the approval of the Public Works Representative/Engineer and shall meet the requirements of the gradation selected. Regardless of the bituminous content, there shall not be more than 3% voids in the aggregate.

The bituminous material for the surface course shall be AC-10 penetration asphalt cement conforming to the requirements of ASTM M20-60.

The bituminous surface course shall be mixed at a mixing plant and spread and compacted on the prepared base in conformance with the lines and dimensions shown on the Drawings and in accordance with these Specifications.

The bituminous mixtures shall be spread with self-propelled mechanical spreading and conditioning equipment capable of distributing at least a 12-foot width. The mixture shall be spread and struck off in such a manner that the finished surface shall result in a uniform smooth surface. The longitudinal joints in succeeding courses shall be offset at least 6-inches transversely to avoid a vertical joint through more than one course.

The temperature of the bituminous mix shall be between 270 deg. F. and 325 deg. F. when placing.

After the mixture has been spread, the surface shall be rolled in longitudinal direction commencing at the outside edge or lower side and proceeding to the higher side. Each pass of the roller shall overlap the preceding pass at least one-half the width of the roller. Rolling shall continue until 95% of the laboratory density as determined in accordance with ASTM Designation D-1559 for the bituminous mixture being used has been obtained. Density tests shall be done following the procedures of ASTM D-2950.

Rolling operations shall be conducted in such a manner that shoving or distortion will not develop beneath the roller.

The surface of the pavement, after compaction, shall be uniform and true to the established grade. When tested with a ten-foot straight edge placed on the surface of the pavement, at any point, the surface shall not deviate more than one-eighth of an inch from the lower edge of the straight edge. All high and low spots shall be remedied immediately by removing the wearing course material over the affected areas and replacing it with fresh, hot wearing course and surface finish material and immediately compacting it to conform with surrounding area.

It is the responsibility of the Developer/Contractor to control traffic. All traffic shall be kept off the completed surface for a minimum period of 24 hours.

No bituminous surface course shall be placed when the temperature of the air or roadbed is 50 deg. F. or below, during rainy weather, when the base is wet, or during other unfavorable weather conditions as determined by the Public Works Representative/Engineer. The air temperature shall be measured in the shade.

Section 11.10 ADJUSTING MANHOLES AND VALVE BOXES TO FINAL GRADE:

This section covers the requirements for adjusting manholes and valves to final grade. The adjustment shall be made with cast-iron ring inserts concrete grade rings or cast-in-place concrete rings or squares. Cast-in-place concrete rings or squares shall be constructed after the asphalt surface has been placed.

When concrete rings are used the concrete shall conform to the requirements of Division 8. Concrete shall be Class AA(AE). The concrete mix shall be one part cement to two parts sand or Kent Seal.

Manholes and valves in asphalt surfaces shall have the cast iron ring and cover constructed such that the cast iron ring is one sixteenth inch (1/16th") lower than the existing or new pavement. Manhole rings shall be set to the grade and slope of the road – shim and grout ring into place.

Where manholes are to be raised this is be accomplished by removing the cover and frame and raising the manhole to proper elevation with concrete.

Rings and covers shall be protected during backfilling and compaction of the soil and during the placing or replacing of road surfaces. Any ring or cover loosened from the manhole section shall be resent in cement mortar and any ring or cover damaged or broken shall be replaced by the Developer/Developer/Contractor at its expense.

DIVISION 12

CONCRETE CURB AND GUTTER AND SIDEWALK

Section 12.01 GENERAL:

This section covers installation of curb and gutter, sidewalk, combination of curb, gutter and sidewalk, cross gutter, drive approaches handicap ramps and curb returns. All improvements shall be constructed to the dimensions and thickness shown on the Standard Drawings.

Section 12.02 CONCRETE:

Concrete shall be Class AA(AE) and shall meet all of the requirements of Division 8, Portland Cement Concrete. Under no condition shall the water cement ratio exceed 0.53.

Section 12.03 GRADE:

After construction, gutters shall be checked by flowing water. The Public Works Representative/Public Works Representative/Engineer shall be present during the flow test. Removing concrete and replacing to the correct grade shall repair any high spots or depressions (which exceed 0.02 feet). (Minimum flow line grade shall be 0.5 percent.)

Section 12.04 FORMS:

All forms shall be steel, except at curves with a radius smaller than 200 feet. They shall be of a size to match the sections shown on the Drawings. Forms shall be held firmly in place with stakes or other approved means and shall be true to line and grade.

All forms shall be clean and coated with a light oil to prevent the concrete from adhering to them. Clamps, spreaders and braces shall be used where required to insure rigidity in the forms.

Forms shall not vary from vertical grade by more than 0.02 feet and from horizontal alignment by more than 0.05 feet. All forms shall have smooth even lines in both the horizontal and vertical plane.

Forms for curved sections shall be so constructed and placed that the finish surface of walls and edge of sidewalks, curbs and gutters will not deviate from the arc of the curve.

Section 12.05 SUBGRADE PREPARATION:

The developer/Developer/Contractor shall grade to the line and grade approved by the City. No concrete shall be placed without approved cut sheets. The sub-grade shall be properly shaped to conform with the cross section shown on the Standard Drawings, graded and compacted. Compaction shall meet the requirements of Division 7 Earthwork.

All excess material excavated by the Developer/Developer/Contractor shall be removed from the site. Removal of the excavated material shall be done before or immediately after the concrete is placed. The Developer/Developer/Contractor shall maintain adequate barricades and other devices to protect the public until excavated material is removed.

Placement of concrete on unsuitable materials shall not be permitted. The subgrade surface shall have a 4-inch roadbase foundation as shown on the Standard Drawings. Immediately prior to the placing of concrete, the subgrade shall be compacted using a mechanical foot compactor, with compaction being at least ninety-six percent (96%) density.

Section 12.06 CONSTRUCTION OF CURB, GUTTER AND SIDEWALK:

Concrete curb, gutter and sidewalk may be constructed by first constructing the curb and gutter and then constructing the sidewalk behind it. If this method is used the joint between the back of curb and front edge of sidewalk shall be sealed. The curb and gutter may be placed using stationary forms or the slip method of forming. Concrete curb, gutter and sidewalk may be constructed at the same time, combination curb, gutter and sidewalk. Stationary forms can be used to place combination curb, gutter and sidewalk or the slip form method can be used if it can be demonstrated that the tolerances specified herein can be met.

Curb and gutter to be installed with bituminous asphalt cement pavement shall have contraction joints placed every 10 feet by use of 1/8-inch steel template of the exact cross section of the curb and gutter. Remove the templates as the concrete takes initial set. Cut the joint 1-1/2 inches deep when using the slip form method to place the concrete. Use 1/2-inch thick, pre-molded, expansion joint filler at curb and gutter radii, where the curb and gutter abuts a solid object and at intervals not to exceed 50 feet, unless otherwise specified by the Public Works Representative/Engineer.

Joints in sidewalk, when placed separately and adjacent to the curb shall match the contraction and expansion joints in the curb and gutter as well as where the sidewalk abuts a solid object. Sidewalks not placed adjacent the curb shall have contraction joints at 10-foot intervals. The joints shall be approximately 3/16 inch wide and approximately one-half of the total slab thickness in depth. Expansion joints shall be 1/2-inch thick, shall be placed every 50 feet, adjoins existing sidewalks, or abuts a solid object.

Material for 1/2-inch expansion joints shall be as specified in AASHTO M-153 and AASHTO M-213, and shall be installed with its top approximately 1/4-inch below the concrete surface.

After the concrete placed for a sidewalk has been brought to the established grade and screeded, it shall be float finished, edged and then given a light broom finish. In no case shall dry cement or a mixture of dry cement and sand be sprinkled on the surface to absorb moisture or hasten hardening. Surface edges of all slabs shall be rounded to a radius of 1/2 inch.

After concrete has been placed in curb and gutter forms, it shall be consolidated so as to insure a thorough mixture, eliminate air pockets, and create uniform, smooth sides. As the concrete takes its initial set the forms shall be removed and all exposed surfaces shall be float finished, edged and broomed lightly. The curb and gutter shall be constructed to the dimensions shown in the Standard Drawings.

The top and face of the curb and also the top of the apron on combination curb and gutter must be finished true to line and grade and without any noticeable irregularities of surface. No portion of the surface or face of the curb and gutter shall depart more than 1/4 inch from a straight edge ten feet in length, placed on the curb parallel to the street center line nor shall any part of the exposed surface present a wavy appearance.

Section 12.07 CONCRETE CURB WALL:

Concrete curb wall shall be Class AA(AE) and shall meet all of the requirements of Division 8, Portland Cement Concrete.

Reinforcing steel shall meet the requirements of Division 9, Reinforcing Steel.

Excavation for and backfill around the curb walls shall meet all the requirements of Division 7, Earthwork.

The curb walls shall be constructed to the dimensions and grades shown on the Standard Drawings or improvement drawings or as determined by the Public Works Representative/Engineer.

Section 12.08 6-INCH CONCRETE DRIVE APPROACH:

The concrete to be used for the drive approach shall be Class AA(AE) and shall meet the requirements of Division 8, Portland Cement Concrete.

The driveways shall be a minimum of 6-inch thick. They shall be constructed to the dimensions shown on the Standard Drawings. The concrete shall be finished as described above for sidewalks.

The driveways shall have a compacted 4-inch untreated base course under them.

Section 12.09 AMERICAN DISABILITIES ACCESSIBILITY STANDARDS IN PUBLIC STREET RIGHT-OF-WAYS:

This section sets guidelines for accessibility to places of public accommodation and commercial facilities by individuals with disabilities. These guidelines are to be applied during the design, construction, and alteration of street construction or public buildings. The construction of curb ramps and drive approaches shall conform to the Standard Drawings.

Sub-section A. Curb Ramp Location:

Curb ramps complying with Section 12.05 shall be provided wherever an accessible route crosses a curb.

Sub-section B. Curb Ramp Slope:

Slope of curb ramps shall be the least possible slope. The maximum slope of a ramp in new construction shall be 1:12. The maximum rise for any run shall be thirty (30) inches. Transitions from ramps to walks, gutters, or streets shall be flush and free of abrupt changes. Maximum slopes of adjoining gutters, road surface immediately adjacent to the curb ramp, or accessible route shall not exceed 1:20.

Sub-section C. Curb Ramp Width:

The minimum width of a curb ramp shall be thirty-six (36) inches, exclusive of flared sides.

Sub-section D. Curb Ramp Surface:

Surface of curb ramps shall be stable, firm, and slip resistant.

Sub-section E. Sides of Curb Ramps:

If a curb ramp is located where pedestrians must walk across the ramp, or where it is not protected by hand rails or guardrails, it shall have flared sides: the maximum slope of the flare shall be 1:12 (see Standard Drawings). Curb ramps with returned curbs may be used where pedestrians would not normally walk across the ramp.

Sub-section E. Built up Curb Ramps:

Built-up curb ramps shall be located so that they do not project into vehicular traffic lanes.

Sub-section G. Obstructions:

Curb ramps shall be located or protected to prevent their obstruction by parked vehicles.

Sub-section H. Location of Marked Crossings:

Curb ramps at marked crossings shall be wholly contained within the markings, excluding any flared sides.

Sub-section I. Diagonal Curb Ramps:

If diagonal (or corner type) curb ramps have returned curbs or other well defined edges, such edges shall be parallel to the direction of pedestrian flow. The bottom of diagonal curb ramps shall have a forty-eight (48) inch minimum clear space. If diagonal curb ramps are provided at marked crossings, the forty-eight (48)

inch clear space shall be within the markings. If diagonal curb ramps have flared sides, they shall also have at least a twenty-four (24) inch long segment of straight curb located on each side of the curb ramp and within the marked crossing.

Sub-section J. Islands:

Any raised islands in crossing shall be cut through level with the street or have curb ramps at both sides and a level area at least forty-eight (48) inches long between the curb ramp in the part of the island intersected by the crossing.

Section 12.10 LANDSCAPE RESTORATION:

Areas of new construction that cover or disturb existing landscaped areas with fills and cuts or areas disturbed by construction of retaining walls shall have the landscape restored. Areas that have lawn or flower beds shall be restored including sprinkling systems that might be damaged or relocated because of construction. Lawn covered or removed shall be replaced by sod.

The topsoil shall be fertile, sandy loam topsoil, obtained from well-drained areas. It shall be without admixture of subsoil or slag and shall be free of stones, lumps, sticks, plants or their roots, toxic substances or other extraneous matter that may be harmful to plant growth and would interfere with future maintenance. Topsoil pH range shall be 5.3 to 6.0.

DIVISION 13

STORM DRAINS

Section 13.01 GENERAL:

This section covers installation of storm drainpipe, manholes, and curb face inlet boxes. All improvements shall be constructed to the dimension and thickness shown on the Standard Drawings.

Section 13.02 PIPE INSTALLATION:

Installation of pipe shall be in an open trench unless otherwise shown. Trench and backfill shall meet the requirements of Division 2, Trench Excavation and Backfill.

Section 13.03 PIPE:

Pipe and pipe laying shall meet the requirements of Division 4, Concrete Pipe, Division 4A, PVC Plastic Pipe, Division 4B, Polyethylene Corrugated Pipe, Division 4C, Polyethylene Corrugated Pipe with Water Tight Joints. Pipe shall be laid with the bells up grade.

Section 13.04 MANHOLES:

Manholes shall meet the requirements of Division 5, Manholes. Where the size of the storm drain does not permit use of manholes, precast or cast-in-place reinforced concrete boxes shall be used. Concrete used in precast or cast-in-place boxes shall be Class AA(AE).

Section 13.05 CONCRETE:

Concrete shall meet the requirements of Division 8, Portland Cement Concrete.

Section 13.06 REINFORCING STEEL:

Reinforcing steel shall meet the requirements of Division 9, Reinforcing Steel.

Section 13.07 STORM DRAIN INLET BOXES:

The concrete to be used for the storm drain inlet boxes shall be Class AA(AE). The boxes shall be built to the dimensions and reinforced as shown on the Standard Drawings. The boxes may be precast or cast-in-place.

Excavation and backfill of the boxes shall meet the requirements of Division 7, Earthwork.

The storm drain inlet grate and frame shall be a D & L Supply I-3518 single unit with curb box with type "V" grate or equal. Grates and frames are to be dipped in cold tar epoxy following fabrication.

Section 13.08 PIPE CONNECTING INLET BOXES TO EXISTING STORM DRAINS:

The pipe to be used for connecting a new inlet box to an existing storm drain shall be of the same type of pipe as the existing pipe to which it is being connected. Where possible such connections shall be made by installation of a manhole. The Public Works Representative/Engineer shall approve connection locations and methods.

Connections to concrete pipe shall be by coring a hole in the pipe and then grouting the connecting pipe to the concrete pipe. Connections to PVC or HDPE pipe shall be as per manufacture's recommendations. These recommendations will be reviewed with the Public Works Representative/Engineer prior to construction.

DIVISION 14

UTAH DEPARTMENT OF TRANSPORTATION RIGHTS-OF-WAY

Section 14.01 GENERAL:

Work to be performed within UDOT rights-of-way shall be done in accordance with "SPECIFICATIONS FOR EXCAVATION ON STATE HIGHWAY RIGHT-OF-WAY", latest revision. The Developer/Contractor shall be responsible to obtain all necessary permits and meet any bond requirements imposed by that agency.

Section 14.02 UTILITY LINE AGREEMENT:

The improvements to be placed along or across UDOT rights-of-way are subject to the conditions of Utility Line Agreements between the UTAH DEPARTMENT OF TRANSPORTATION and MENDON CITY. The Developer/Contractor is bound by all conditions of the Agreement. The Developer shall be responsible for completing the Utility Line Agreement and furnishing the necessary Drawings and other information, including meeting with UDOT to insure requirements are met, required by UDOT. The Developer shall then submit the completed agreement to the City for signature and forwarding to UDOT. The Developer/Contractor shall not proceed with any work in a UDOT right-of-way until it has obtained a permit from UDOT, posted the required bond (if one is required) and provided any other information, such as traffic control plans, required by UDOT.

Section 14.03 INSPECTION FEES:

The Developer/Contractor will pay UDOT fees for any UDOT inspectors.

DIVISION 15

CASINGS

Section 15.01 GENERAL:

This division defines the materials and construction requirements for steel casings under canals, railroad tracks, highways and Interstates. All construction operations shall be subject to the approval of the canal, Railroad Company or UDOT whose facility is being crossed. The Developer/Contractor shall make application to and secure permission from the canal, Railroad Company or UDOT before commencing work within the right-of-way. The Developer/Contractor shall provide all insurance and the services of all watchmen and flagmen required by the Railroad Company or UDOT. The Developer/Contractor will pay the Railroad Company and UDOT for their inspection services.

Section 15.02 MATERIALS:

The pipe shall be welded steel pipe conforming to ASTM Designation A-139, Grade A. Pipe wall thickness shall be a minimum of point three seven five inches (0.375") or as shown on the Drawings.

Section 15.03 CONSTRUCTION METHODS:

The steel pipe casing shall be jacked under the railroad tracks, highway or Interstate using methods submitted to the Public Works Representative/Engineer for review by the Public Works Representative/Engineer. Circular pipe joints shall be field welded as the jacking process progresses. The pipe interior shall be completely excavated and cleaned prior to installation of the carrier pipe.

Steel pipe casing shall be installed by open cut under canals. These installations shall be as per details approved by the canal company.

All required approach trenches or working pits shall be excavated and shored as defined in Division 2, Trench Excavation and Backfill. Provisions shall be made for a drain sump in one corner of the working pit to allow for the accumulation and pumping of seepage water, if ground water is expected to be encountered.

Section 15.04 LINE AND GRADE:

Casings shall be installed accurately to the line and grade shown on the Drawings. Casings shall be installed to grade with sufficient accuracy to permit installation of the carrier pipe to the design grade shown on the Drawings or to the cover depth required. The Developer's Public Works Representative/Engineer will provide base lines and bench marks at each casing location. Instrument checks of the line and grade shall be made by the Developer/Contractor at intervals sufficient to maintain the casing on line and grade.

Section 15.05 CARRIER PIPE INSTALLATION THROUGH CASINGS:

The carrier pipe shall be installed to the grade shown on the Drawings. Casing insulators or chocks shall be fastened to the carrier pipe as per the manufacturer's recommendations. For ductile iron pipe or PVC pipe, insulators shall be installed within one foot on each side of the bell and one in the center of the joint when 18' or 20' long joints are used. Metal components of the insulators or chocks shall be manufactured from 14 Ga. Steel, hot rolled and pickled and plastic coated or Type 304(18-8) stainless steel. The liner shall be polyvinyl chloride or Neoprene Rubber with antioxidant and antiozonant properties for extended service life. Runners shall be glass-reinforced plastic or UHMW polyethylene. Runners shall have high abrasion resistance and a low friction coefficient. Following installation of the carrier pipe the annular space between the inside of the casing and the outside of the carrier pipe shall be blown full of sand. The sanding operation shall be carried out such that sand is placed in the center of the casing first and the annular space filled as the placing pipe is withdrawn. The Developer/Contractor shall not be allowed to wash sand in from the end of the casing.

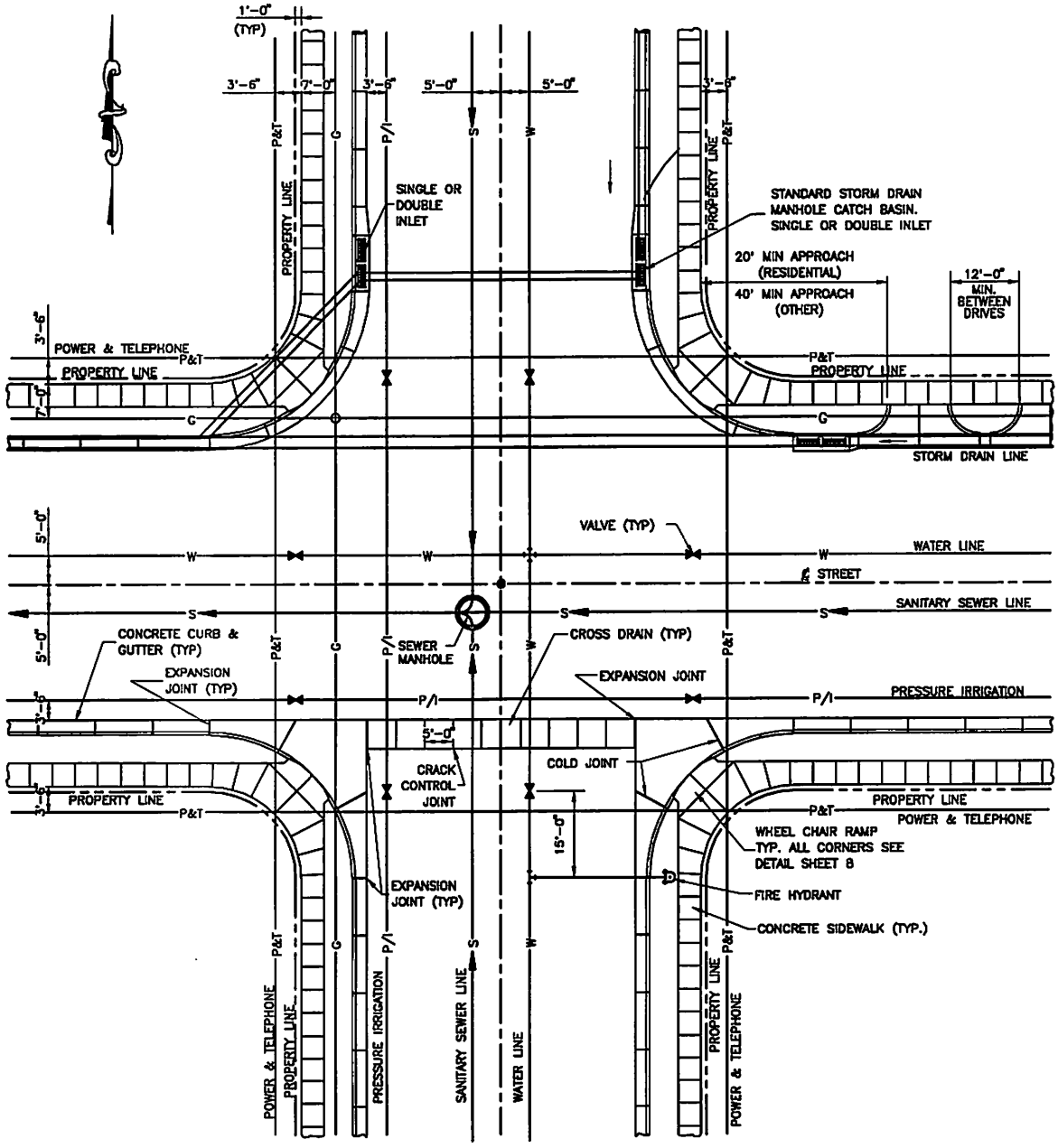

STATEMENT OF USE

THIS DOCUMENT AND ANY ILLUSTRATIONS HEREON ARE PROVIDED AS STANDARD CONSTRUCTION DETAILS WITHIN MENDON CITY. DEVIATION FROM THIS DOCUMENT REQUIRES APPROVAL OF MENDON CITY. MENDON CITY CORPORATION CAN NOT BE HELD LIABLE FOR MISUSE OR CHANGES REGARDING THIS DOCUMENT.

REVISION

NO.	DESCRIPTION	BY	APR.	DATE
1				
2				
3				
4				

(J-U-B) Engineers • Surveyors • Planners

MENDON CTY CORP. DEVELOPMENT STANDARDS

STANDARD CURB & GUTTER STREET IMPROVEMENTS AND UTILITY LOCATIONS

STANDARD DRAWING NUMBER:	1
CAD DWG:	SHEET 01
PLOT SCALE:	1 = 32
DATE:	JAN 2001
DRAWN BY:	JDM
DESIGN BY:	TPM
CHECKED BY:	TLA
ADOPTED DATE:	-

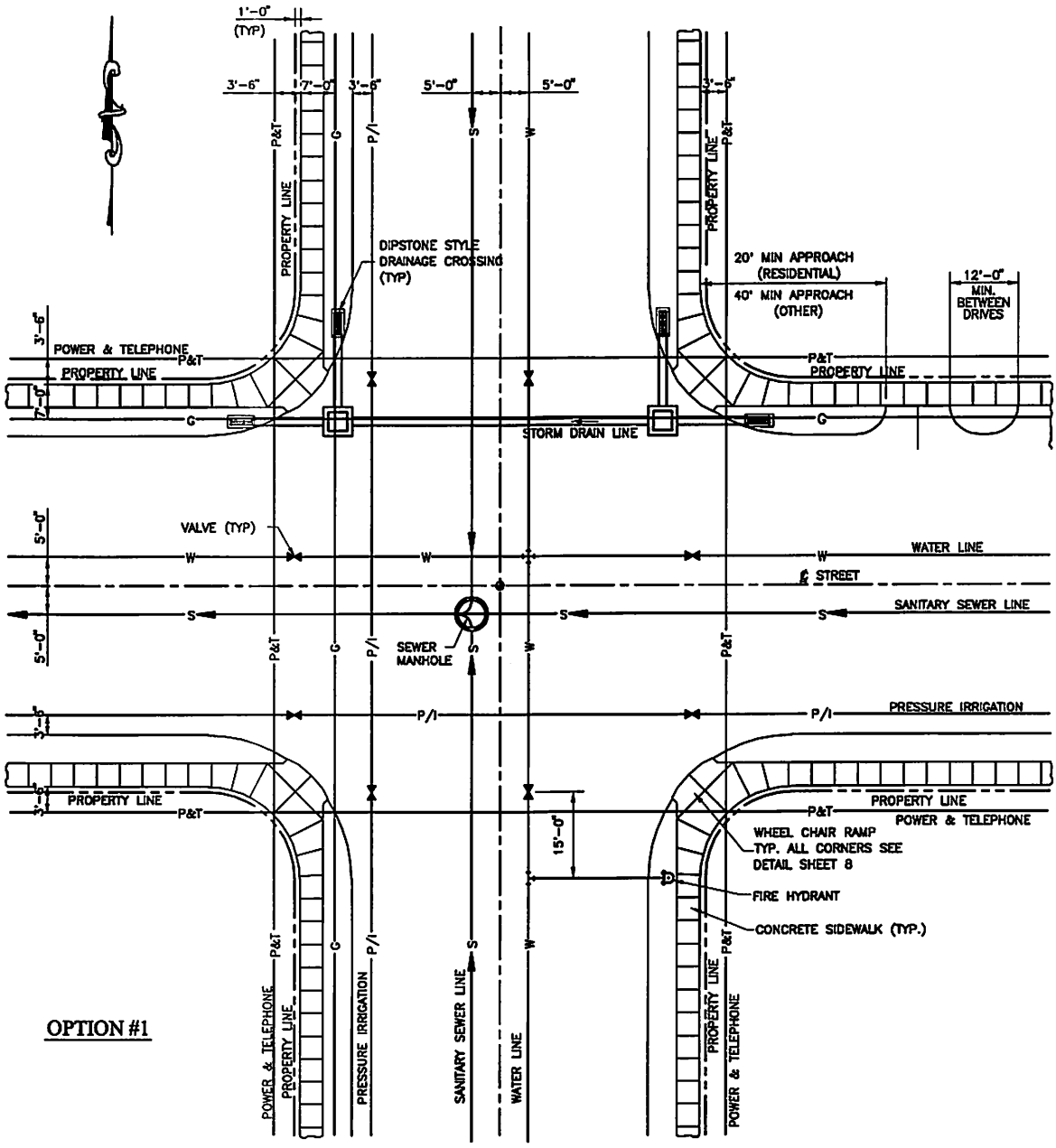

STATEMENT OF USE

THIS DOCUMENT AND ANY ILLUSTRATIONS HEREON ARE PROVIDED AS STANDARD CONSTRUCTION DETAILS WITHIN MENDON CITY. DEVIATION FROM THIS DOCUMENT REQUIRES APPROVAL OF MENDON CITY. MENDON CITY CORPORATION CAN NOT BE HELD LIABLE FOR MISUSE OR CHANGES REGARDING THIS DOCUMENT.

REVISION

NO.	DESCRIPTION	BY	APR.	DATE
1				
2				
3				
4				

J-U-B Engineers • Surveyors • Planners

MENDON CTY CORP. DEVELOPMENT STANDARDS

STANDARD SWALE STREET IMPROVEMENTS AND UTILITY LOCATIONS

STANDARD DRAWING NUMBER:	2
CAD DWG:	SHEET 02
PLOT SCALE:	1 = 32
DATE:	JAN 2001
DRAWN BY:	JDM
DESIGN BY:	ZPM
CHECKED BY:	TLA
ADOPTED DATE:	—

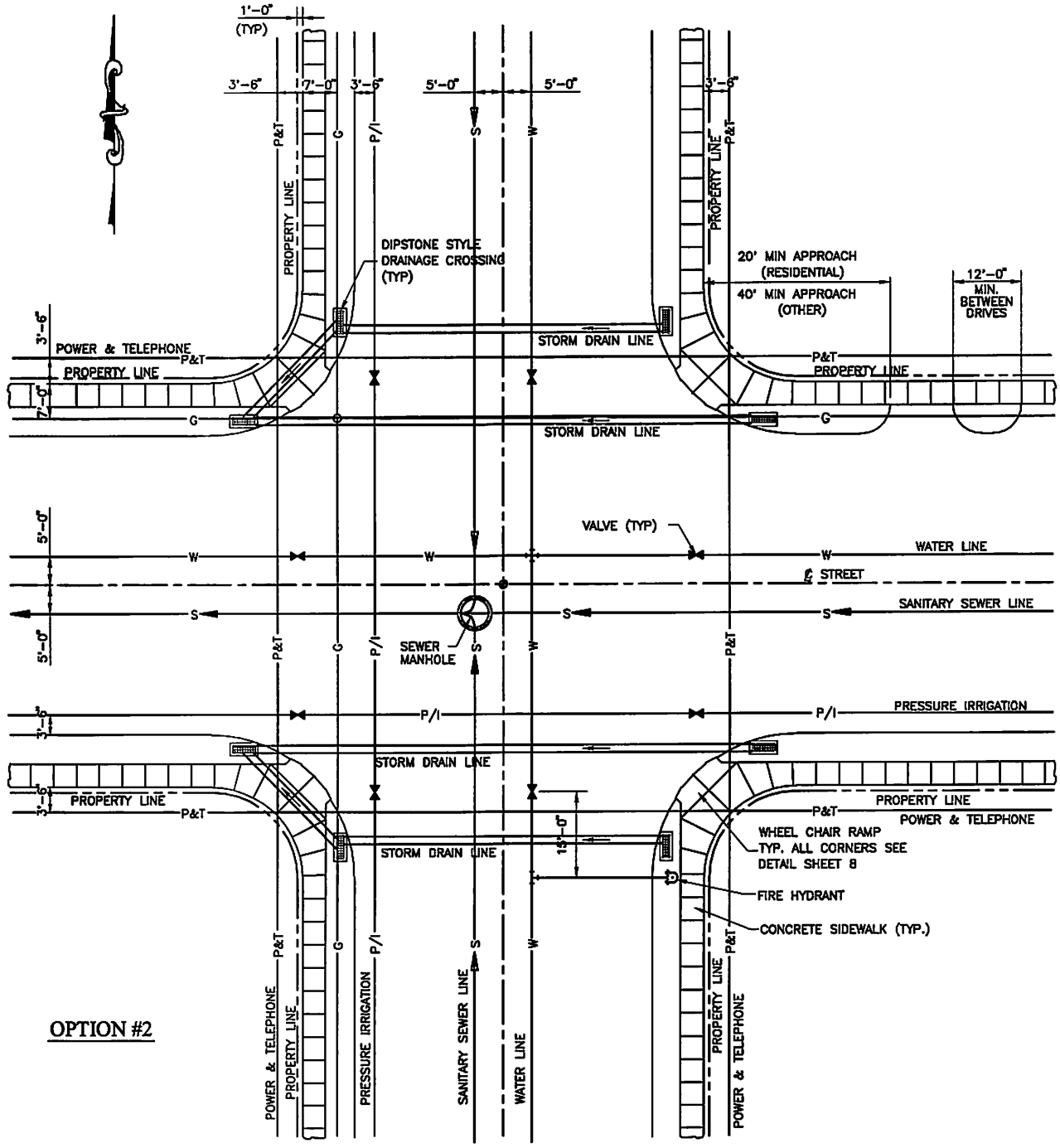

OPTION #2

STATEMENT OF USE

THIS DOCUMENT AND ANY ILLUSTRATIONS HEREON ARE PROVIDED AS STANDARD CONSTRUCTION DETAILS WITHIN MENDON CITY. DEVIATION FROM THIS DOCUMENT REQUIRES APPROVAL OF MENDON CITY. MENDON CITY CORPORATION CAN NOT BE HELD LIABLE FOR MISUSE OR CHANGES REGARDING THIS DOCUMENT.

REVISION

NO.	DESCRIPTION	BY	APR.	DATE

J-U-B Engineers • Surveyors • Planners

MENDON CTY CORP. DEVELOPMENT STANDARDS

STANDARD SWALE STREET IMPROVEMENTS AND UTILITY LOCATIONS

STANDARD DRAWING NUMBER:	3
CAD DWG:	SHEET 03
PLOT SCALE:	1 = 32
DATE:	JAN 2001
DRAWN BY:	JDM
DESIGN BY:	ZPM
CHECKED BY:	TLA
ADOPTED DATE:	–

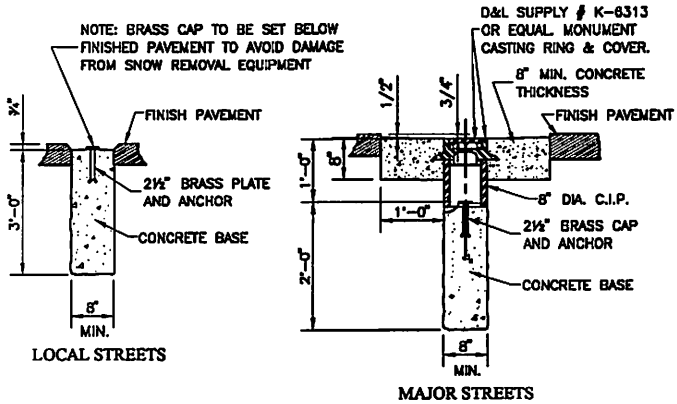

SURVEY MONUMENT SECTION

SCALE: N.T.S.

NOTES:
1. 6" THICKNESS IN RESIDENTIAL AND COMMERCIAL DRIVEWAYS
2. CRACK CONTROL JOINTS @ 4' EXPANSION JOINTS @ 32'
3. SIDEWALK MAY BE WIDER WHERE SPECIFIED BY CITY ENGINEERING DEPT.

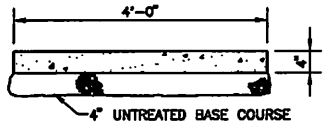

SIDEWALK SECTION

SCALE: N.T.S.

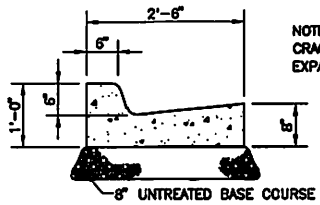

NOTES:
CRACK CONTROL JOINTS @ 10'
EXPANSION JOINTS @ 50'

STANDARD CURB & SECTION

SCALE: N.T.S.

NOTES:
CONSTRUCTION & EXPANSION JOINTS @ 5'
EXPANSION JOINTS @ EDGE OF APRON

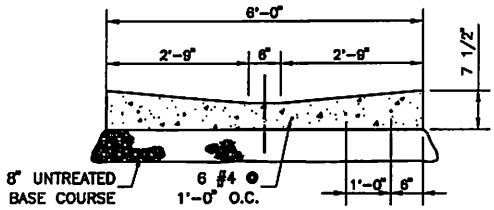

CROSS DRAIN SECTION

SCALE: N.T.S.

STATEMENT OF USE

THIS DOCUMENT AND ANY ILLUSTRATIONS HEREON ARE PROVIDED AS STANDARD CONSTRUCTION DETAILS WITHIN MENDON CITY. DEVIATION FROM THIS DOCUMENT REQUIRES APPROVAL OF MENDON CITY. MENDON CITY CORPORATION CAN NOT BE HELD LIABLE FOR MISUSE OR CHANGES REGARDING THIS DOCUMENT.

REVISION

NO.	DESCRIPTION	BY	APR.	DATE
1				
2				
3				
4				

J-U-B Engineers • Surveyors • Planners

MENDON CITY CORP. DEVELOPMENT STANDARDS

STREET IMPROVEMENT SECTIONS

STANDARD DRAWING NUMBER:	4
CAD DWG:	SHEET 04
PLOT SCALE:	1 = 32
DATE:	JAN 2001
DRAWN BY:	JDM
DESIGN BY:	ZPM
CHECKED BY:	TLA
ADOPTED DATE:	–

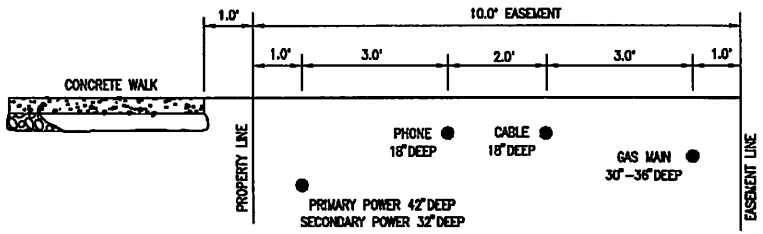

UTILITY EASEMENT SECTION

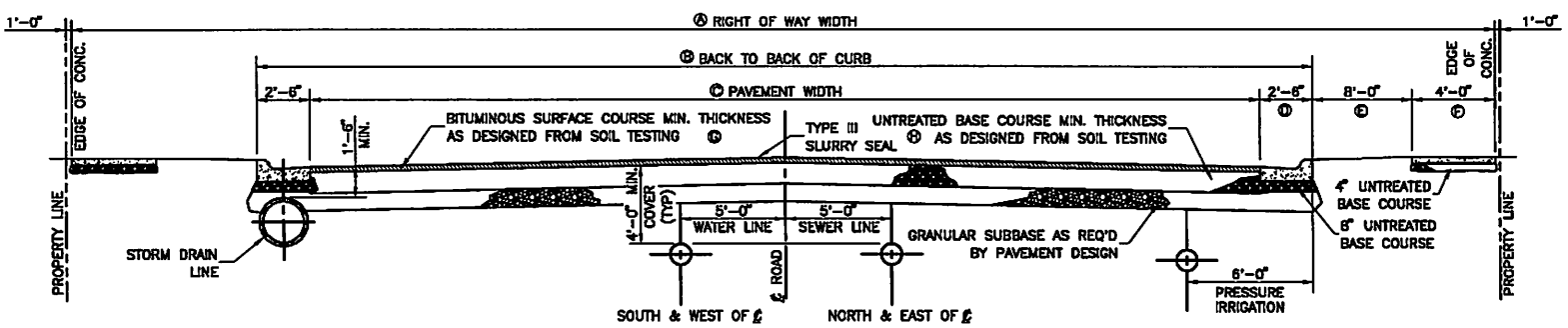

NOTES:
1. TOP BACK OF CURB ON BOTH SIDES OF ROAD TO BE SAME ELEVATIONS.
2. THE CITY ENGINEER SHALL VERIFY PAVEMENT DESIGN PRESCRIBED BY SOILS REPORT. (SEE SPECIFICATIONS)
3. COMMERCIAL AND INDUSTRIAL STREET SECTIONS ARE DETERMINED BASED ON A TRAFFIC ANALYSIS FOR THE PARTICULAR USE.

STREET DESIGNATION	Ⓐ	Ⓑ	Ⓒ	Ⓓ	Ⓔ	Ⓕ	Ⓖ	Ⓗ
ARTERIAL	UDOT	UDOT	UDOT	UDOT	8.0'	4.0'	NOTE 2	NOTE 2
SECONDARY ARTERIAL	84'	58'	53'	2.5'	8.0'	4.0'	NOTE 2	NOTE 2
COLLECTOR	66'	40'	35'	2.5'	8.0'	4.0'	NOTE 2	NOTE 2

STANDARD CURB & GUTTER STREET SECTION

STATEMENT OF USE

THIS DOCUMENT AND ANY ILLUSTRATIONS HEREON ARE PREPARED AS STANDARD CONSTRUCTION DETAILS WITHIN MENDON CITY. DEVIATION FROM THIS DOCUMENT REQUIRES APPROVAL OF MENDON CITY. MENDON CITY CORPORATION CAN NOT BE HELD LIABLE FOR MISUSE OR CHANGES REDRAWING THIS DOCUMENT.

REVISION

NO.	DESCRIPTION	BY	APR.	DATE

J-U-B
Engineers • Surveyors • Planners

MENDON CITY CORP. DEVELOPMENT STANDARDS

STANDARD CURB & GUTTER STREET SECTION

STANDARD DRAWING NUMBER: 5
CAD DWG: SHEET 05
PLOT SCALE: 1 = 96
DATE: JAN 2001
DRAWN BY: JDM
DESIGN BY: ZPM
CHECKED BY: TLA
ADOPTED DATE: -

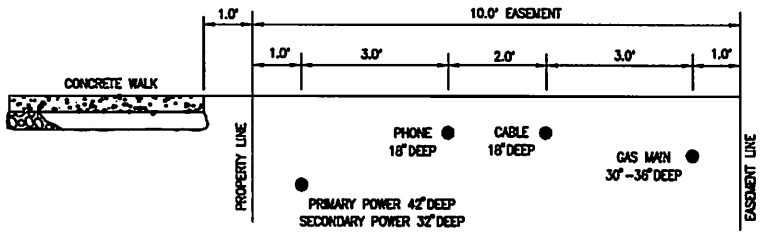

UTILITY EASEMENT SECTION

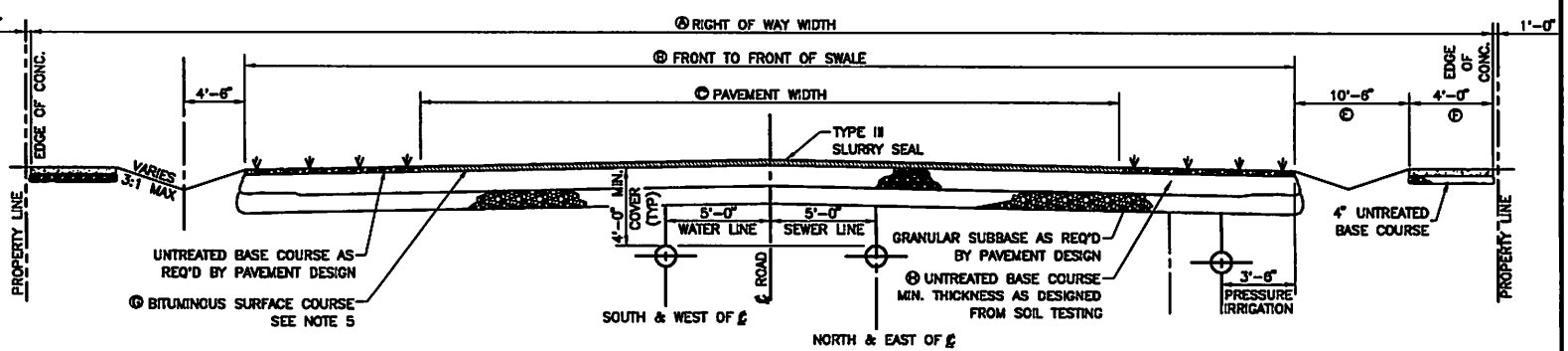

NOTES:
1. TOP SIDEWALK ON BOTH SIDES OF ROAD TO BE SAME ELEVATIONS.
2. THE CITY ENGINEER SHALL VERIFY PAVEMENT DESIGN PRESCRIBED BY SOILS REPORT. (SEE SPECIFICATIONS)
3. COMMERCIAL AND INDUSTRIAL STREET SECTIONS ARE DETERMINED BASED ON A TRAFFIC ANALYSIS FOR THE PARTICULAR USE.
4. SWALE SECTION NOT ALLOWED IN COMMERCIAL DEVELOPMENT.
5. GRASS OVER UNTREATED BASE COURSE WILL BE ALLOWED AS APPROVED BY CITY ENGINEER.

STREET DESIGNATION	Ⓐ	Ⓑ	Ⓒ	Ⓓ	Ⓔ	Ⓕ	Ⓖ	Ⓗ
ARTERIAL	UDOT	N/A	UDOT	N/A	10.5'	4.0'	NOTE 2	NOTE 2
SECONDARY ARTERIAL	84'	N/A	53'	N/A	10.5'	4.0'	NOTE 2	NOTE 2
COLLECTOR	66'	40'	25'	N/A	10.5'	4.0'	NOTE 2	NOTE 2

STANDARD SWALE STREET SECTION

STATEMENT OF USE
THIS DOCUMENT AND ANY ILLUSTRATIONS HEREIN ARE PREPARED AS STANDARD CONSTRUCTION DETAILS WITHIN MENDON CITY. EXPANSION FROM THIS DOCUMENT REQUIRES APPROVAL OF MENDON CITY. MENDON CITY CORPORATION CAN NOT BE HELD LIABLE FOR MISUSE OR CHANGES REGARDING THIS DOCUMENT.

REVISION

NO.	DESCRIPTION	BY	APPL.	DATE

J-U-B Engineers • Surveyors • Planners

MENDON CITY CORP.
DEVELOPMENT STANDARDS

STANDARD SWALE STREET SECTION

STANDARD DRAWING NUMBER:	6
CAD DWG.	SHEET 06
PLOT SCALE:	1 = 96
DATE:	JAN 2001
DRAWN BY:	JRM
DESIGN BY:	ZPM
CHECKED BY:	TLA
ADOPTED DATE:	-

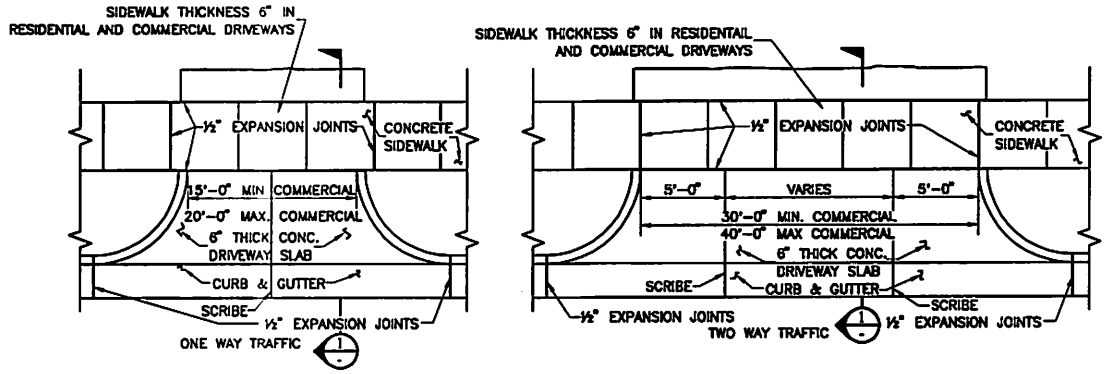

TYPE 1 DRIVEWAY APPROACH

PREFERRED STYLE FOR COMMERCIAL DEVELOPMENT

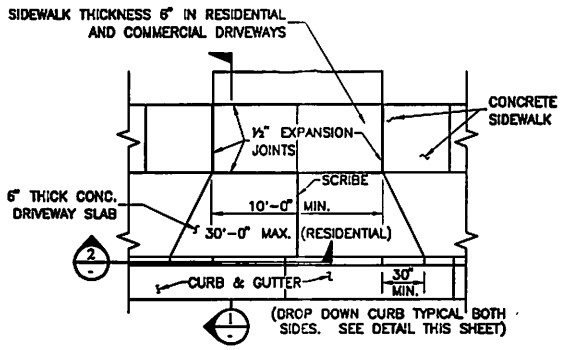

TYPE 2 DRIVEWAY APPROACH (CURB & GUTTER)

PREFERRED STYLE FOR RESIDENTIAL DEVELOPMENT

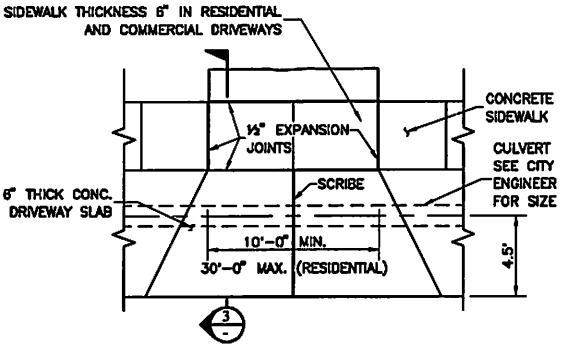

TYPE 2 DRIVEWAY APPROACH (SWALE)

PREFERRED STYLE FOR RESIDENTIAL DEVELOPMENT

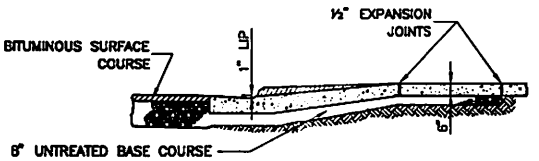

SECTION 1 -

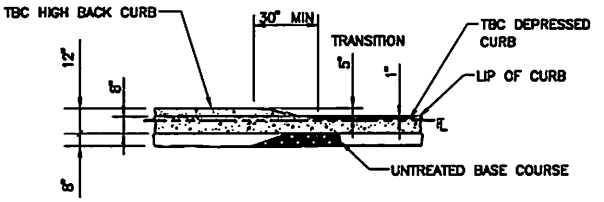

SECTION 2 -

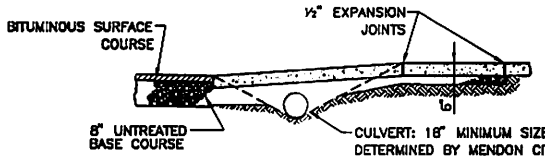

SECTION 3 -

NOTE:
SCRIBE SIDEWALK ½" DEPTH AT EACH 4'-0"
EXPANSION JOINT AT EACH 32'-0"
CURB & GUTTER EXPANSION JOINT AT EACH 50'
CURB & GUTTER CONSTRUCTION JOINT AT EACH 10'

STATEMENT OF USE
THIS DOCUMENT AND ANY ILLUSTRATIONS HEREON ARE PROVIDED AS STANDARD CONSTRUCTION DETAILS WITHIN MENDON CITY. DEVIATION FROM THIS DOCUMENT REQUIRES APPROVAL OF MENDON CITY. MENDON CITY CORPORATION CAN NOT BE HELD LIABLE FOR MISUSE OR CHANGES REGARDING THIS DOCUMENT.

REVISION

NO.	DESCRIPTION	BY	APR.	DATE
1				
2				
3				
4				

JUB Engineers • Surveyors • Planners

MENDON CITY CORP. DEVELOPMENT STANDARDS

DRIVEWAY DETAILS

STANDARD DRAWING NUMBER:	7
CAD DWG:	SHEET 07
PLOT SCALE:	1 = 96
DATE:	JAN 2001
DRAWN BY:	JDM
DESIGN BY:	ZPM
CHECKED BY:	TLA
ADOPTED DATE:	-

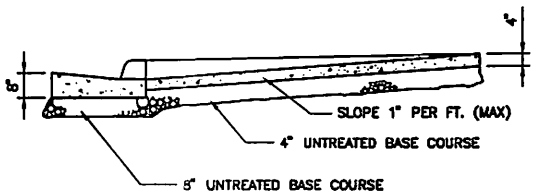

SECTION 1
SCALE: N.T.S.

DIMENSION TABLE

CURB	RADIUS	ACCELERATE/ DECELERATE LANE
LOCAL/LOCAL	24'-6"	NO
LOCAL/COLLECTOR	24'-6"	NO
LOCAL/SECONDARY ARTERIAL	UDOT	NO
LOCAL/ARTERIAL	UDOT	UDOT
COLLECTOR/SECONDARY ARTERIAL	UDOT	UDOT
COLLECTOR/ARTERIAL	UDOT	UDOT
SECONDARY ARTERIAL/ARTERIAL	UDOT	UDOT

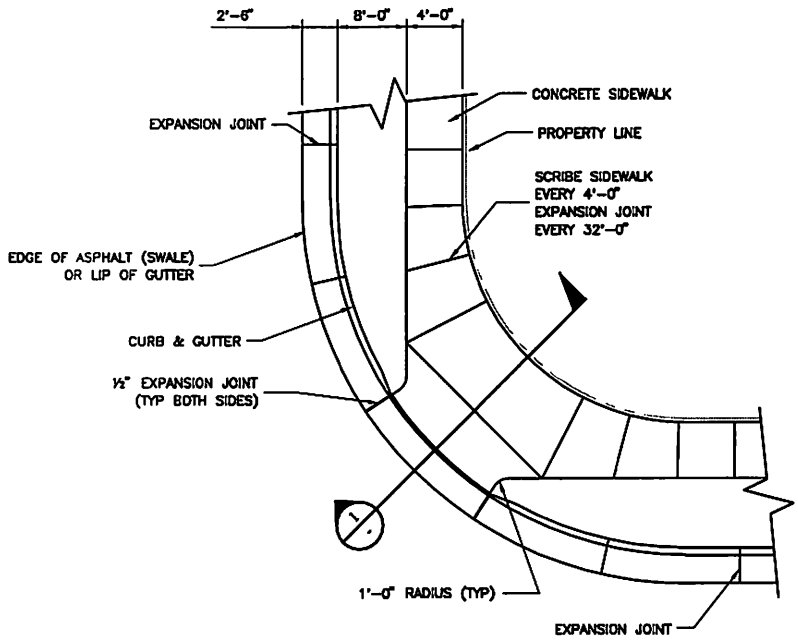

A.D.A. WHEELCHAIR RAMP-DETAIL "A"
SCALE: N.T.S.

STATEMENT OF USE

THIS DOCUMENT AND ANY ILLUSTRATIONS HEREON ARE PROVIDED AS STANDARD CONSTRUCTION DETAILS WITHIN MENDON CITY. REVISION FROM THIS DOCUMENT REQUIRES APPROVAL OF MENDON CITY. MENDON CITY CORPORATION CAN NOT BE HELD LIABLE FOR MISUSE OR CHANGES REGARDING THIS DOCUMENT.

REVISION

NO.	DESCRIPTION	BY	APR.	DATE
1				
2				
3				
4				

Engineers • Surveyors • Planners

MENDON CITY CORP. DEVELOPMENT STANDARDS

A.D.A. WHEELCHAIR RAMP DETAIL "A"

STANDARD DRAWING NUMBER:	8
CAD DWG:	SHEET 08
PLOT SCALE:	1 = 24
DATE:	JAN 2001
DRAWN BY:	JDM
DESIGN BY:	ZPM
CHECKED BY:	TLA
ADOPTED DATE:	—

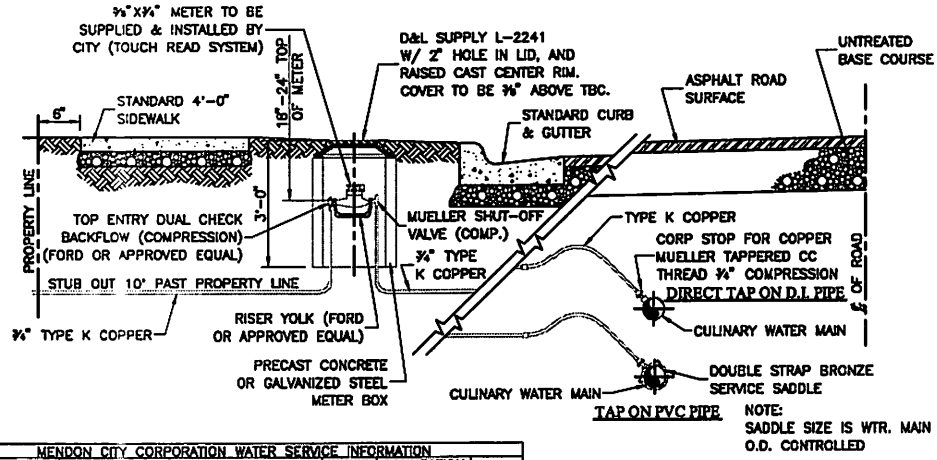

MENDON CITY CORPORATION WATER SERVICE INFORMATION

SERVICE SIZE	METER BOX SIZE	TYPE OF MATERIAL FOR METER BOX	WATER METER	CONNECTION TYPE	BYPASS
¾"	18" DIA.	CONCRETE,CORREGATED,POLYETHYLENE	BY CITY	COMPRESSION	NO
1"	24" DIA.	CONCRETE,CORREGATED,POLYETHYLENE	BY CITY	COMPRESSION	NO
1½"	48" DIA.	CONCRETE	BY CITY	FLANGE	YES
2"	48" DIA.	CONCRETE	BY CITY	FLANGE	YES
3"	60" DIA.	CONCRETE	BY CITY	FLANGE	YES
4"	4'X6'ROX	CONCRETE	BY CITY	FLANGE	YES

TYPICAL WATER CONNECTION

SCALE: N.T.S.

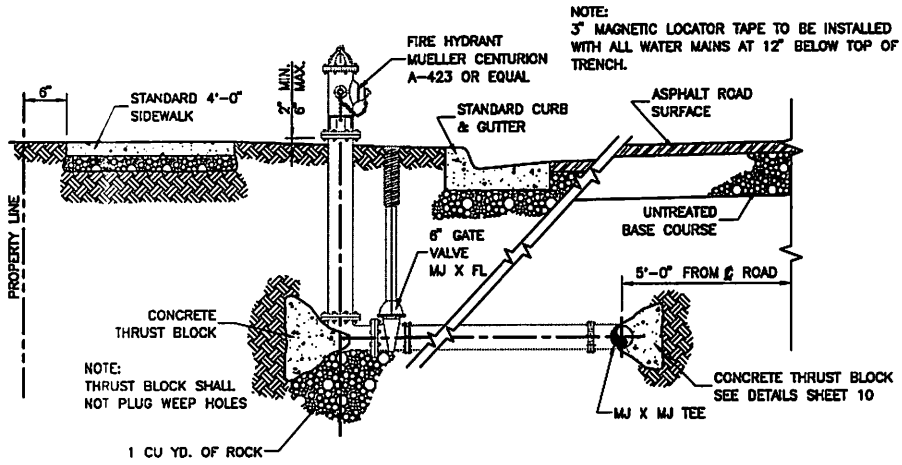

TYPICAL FIRE HYDRANT CONNECTION

SCALE: N.T.S.

STATEMENT OF USE

THIS DOCUMENT AND ANY ELECTRONIC MEDIUM ARE PROVIDED AS STANDARD CONSTRUCTION DETAILS WITHIN MENDON CITY. DEVIATION FROM THIS DOCUMENT REQUIRES APPROVAL OF MENDON CITY. MENDON CITY CORPORATION CAN NOT BE HELD LIABLE FOR MISUSE OR CHANGES REGARDING THIS DOCUMENT.

REVISION

NO.	DESCRIPTION	BY	APR.	DATE
1				
2				
3				

J-U-B Engineers • Surveyors • Planners

MENDON CITY CORP. DEVELOPMENT STANDARDS

TYPICAL FIRE HYDRANT AND WATER SERVICE CONNECTION DETAILS

STANDARD DRAWING NUMBER:	9
CAD DWG:	SHEET 09
PLOT SCALE:	1 = 48
DATE:	JAN 2001
DRAWN BY:	JDM
DESIGN BY:	ZPM
CHECKED BY:	TLA
ADOPTED DATE:	–

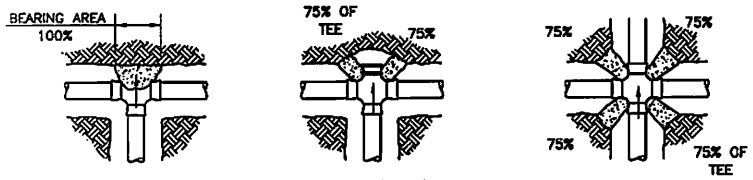

PLANS

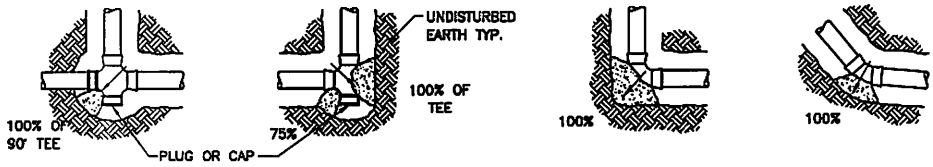

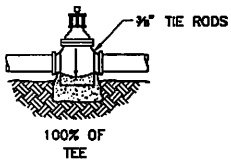

VALVE

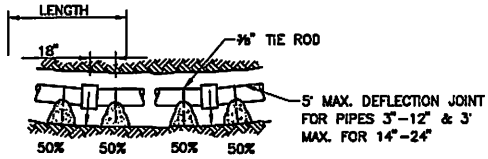

CURVE THRUST BLOCKING

ALL MJ AND FLANGED FITTINGS TO BE WRAPPED WITH POLYETHYLENE WRAP PRIOR TO POURING THRUST BLOCK.

DETAIL NOTES:
1. FIGURE (100%) AT THRUST BLOCK INDICATES PER CENT OF TOTAL THRUST TO BE APPLIED FOR BEARING AREA.
2. ARROW (⟷) INDICATES THRUST DIRECTION.
3. CONCRETE FOR THRUST BLOCKS TO BE 2000 P.S.I.

EXAMPLE:
8" 90° ELBOW, PRESSURE–200 LB. / SQ. IN.
FROM TABLE: THRUST = 94 X 200 = 18800 LB.
ASSUME BEARING STRENGTH OF SOIL = 2000 LB. / SQ. FT.
$\frac{18000}{2000}$ = 9.4 SQ. FT. = AREA OF BEARING REQUIRED FOR THRUST BLOCK.

SIDE THRUST PER 1 PSI				
PIPE SIZE	DEAD END OR TEE	90° ELBOW	45° ELBOW	22½° ELBOW
4	19	27	15	7
6	39	55	30	15
8	67	94	51	26
10	109	154	84	43
12	155	218	119	61
14	210	298	161	82
16	272	383	209	108
18	351	494	269	137
20	434	611	333	169
24	623	878	478	244

TABLE NOTES:
1. IN USING THE ABOVE TABLES, USE THE MAXIMUM INTERNAL PRESSURE ANTICIPATED (I.E. HYDROSTATIC TEST PRESSURE, POSSIBLE SURGE PRESSURE DUE TO PUMP SHUT–OFF, ETC.)
2. SEE SOILS REPORT FOR BEARING STRENGTH OF SOIL IN THE ABSENCE OF A SOILS REPORT, AND AVERAGE SOIL (SPADABLE MEDIUM CLAY) CAN BE ASSUMED TO HAVE A BEARING STRENGTH OF 2000 P.S.F.

THRUST BLOCK DETAILS

STATEMENT OF USE
THIS DOCUMENT AND ANY ILLUSTRATIONS HEREON ARE PROVIDED AS STANDARD CONSTRUCTION DETAILS WITHIN MENDON CITY. DEVIATION FROM THIS DOCUMENT REQUIRES APPROVAL OF MENDON CITY. MENDON CITY CORPORATION CAN NOT BE HELD LIABLE FOR MISUSE OR CHANGES REGARDING THIS DOCUMENT.

REVISION

NO.	DESCRIPTION	BY	APR.	DATE
1				
2				
3				
4				

J-U-B Engineers • Surveyors • Planners

MENDON CITY CORP. DEVELOPMENT STANDARDS

THRUST BLOCK DETAILS

STANDARD DRAWING NUMBER:	10
CAD DWG:	SHEET 10
PLOT SCALE:	1 = 95
DATE:	JAN 2001
DRAWN BY:	JDM
DESIGN BY:	ZPM
CHECKED BY:	TLA
ADOPTED DATE:	–

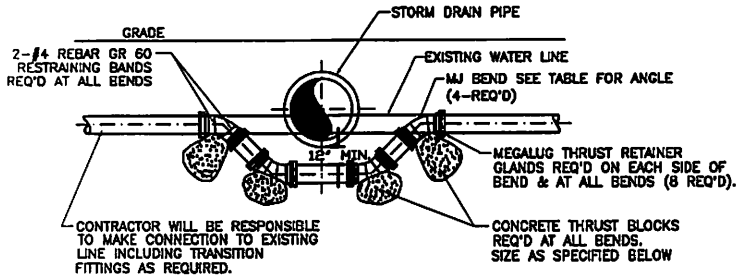

NOTES:

BEFORE RELOCATING AN EXISTING WATERLINE THE CONTRACTOR SHALL NOTIFY ALL AFFECTED BUSINESSES AND RESIDENTS 24 HOURS BEFORE CONSTRUCTION. THE CONTRACTOR MUST DEMONSTRATE TO THE CITY THAT ALL OF THE MATERIALS ARE ON HAND THAT MAY BE NEEDED BEFORE RELOCATING ANY WATERLINES. RELOCATION OF WATERLINES WILL NOT BE STARTED AFTER 10:00 A.M. THE CITY SHALL OPERATE ALL MAINLINE WATER VALVES AND THE CONTRACTOR MUST CONTACT THE CITY IF SERVICE IS REQUIRED.

NOTE:

ALL MJ AND FLANGED FITTINGS TO BE WRAPPED WITH POLYEHTYLENE WRAP PRIOR TO POURING THRUST BLOCK.

VERTICAL BEND

WEIGHT OF CONCRETE TO RESIST 100% OF TOTAL THRUST

VERTICAL THRUST BLOCK DIMENSION TABLE

	CONDITION		
PIPE SIZE	BEND ANGLE	BEARING AREA (SF)	GRAVITY BLOCK SIZE CY
4	45	1.0	0.5
6	45	2.0	0.75
8	22.5	2.0	0.75
10	22.5	3.0	1.0
12	22.5	4.0	1.5
12	11.25	2.0	0.75

DIMENSION TABLE CONDITIONS:

LINE PRESSURE - 120 PSI
SOIL BEARING CAPACITY - 1500 PSF
CONCRETE FOR THRUST BLOCKS TO BE 2000 P.S.I.

WATERLINE LOOP DETAIL

SCALE: N.T.S.

STATEMENT OF USE

THIS DOCUMENT AND ANY ILLUSTRATIONS HEREON ARE PROVIDED AS STANDARD CONSTRUCTION DETAILS WITHIN MENDON CITY. DEVIATION FROM THIS DOCUMENT REQUIRES APPROVAL OF MENDON CITY. MENDON CITY CORPORATION CAN NOT BE HELD LIABLE FOR MISUSE OR CHANGES REGARDING THIS DOCUMENT.

REVISION

NO.	DESCRIPTION	BY	APR.	DATE
1				
2				
3				
4				

J-U-B Engineers • Surveyors • Planners

MENDON CITY CORP. DEVELOPMENT STANDARDS

WATERLINE LOOP DETAIL

STANDARD DRAWING NUMBER:	11
CAD DWG:	SHEET 11
PLOT SCALE:	1 = 98
DATE:	JAN 2001
DRAWN BY:	JDM
DESIGN BY:	ZPM
CHECKED BY:	TLA
ADOPTED DATE:	-

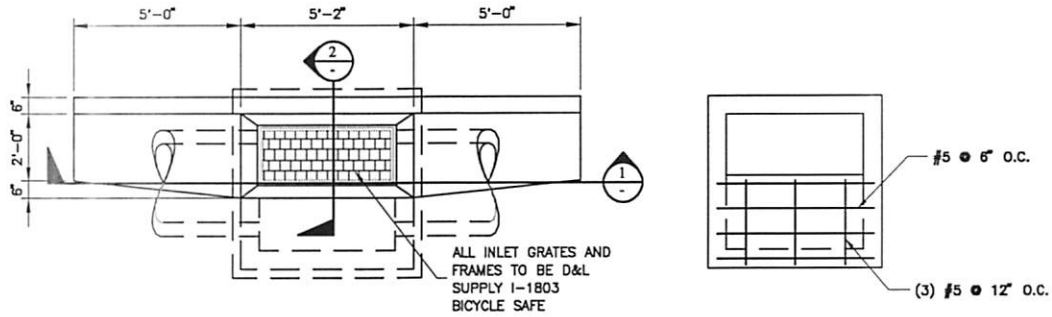

SINGLE CATCH BASIN PLAN VIEW

SCALE: N.T.S.

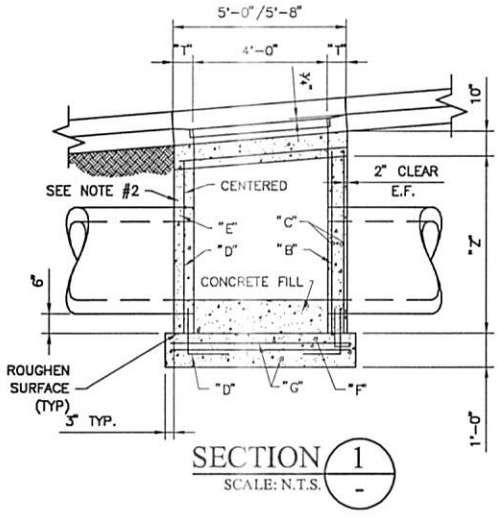

SECTION 1

SCALE: N.T.S.

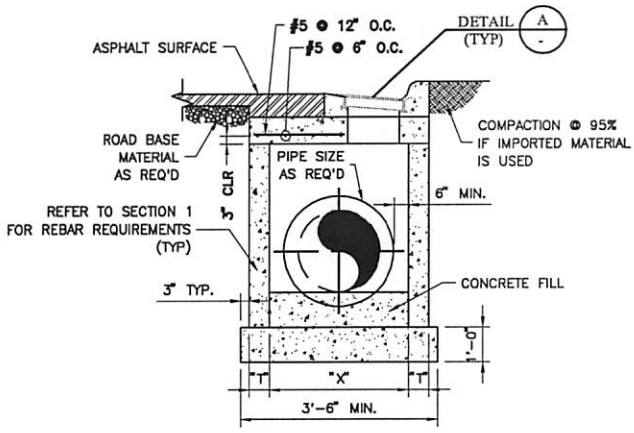

SECTION 2

SCALE: N.T.S.

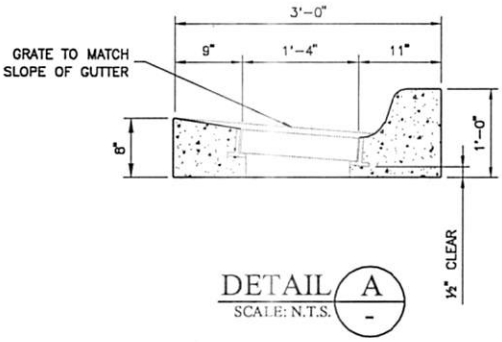

DETAIL A

SCALE: N.T.S.

NOTES:
1. REFER TO SHEET 16 FOR GENERAL NOTES.
2. REFER TO SHEET 16 FOR DIMENSION TABLE AND NOTES.

STATEMENT OF USE

THIS DOCUMENT AND ANY ILLUSTRATIONS HEREON ARE PROVIDED AS STANDARD CONSTRUCTION DETAILS WITHIN MENDON CITY. DEVIATION FROM THIS DOCUMENT REQUIRES APPROVAL OF MENDON CITY. MENDON CITY CORPORATION CAN NOT BE HELD LIABLE FOR MISUSE OR CHANGES REGARDING THIS DOCUMENT.

REVISION

NO.	DESCRIPTION	BY	APR.	DATE
1				
2				
3				
4				

J-U-B Engineers • Surveyors • Planners

MENDON CITY CORP. DEVELOPMENT STANDARDS

STANDARD SINGLE CATCH BASIN

STANDARD DRAWING NUMBER:	12
CAD DWG:	SHEET 12
PLOT SCALE:	1 = 96
DATE:	JAN 2001
DRAWN BY:	JDM
DESIGN BY:	ZPM
CHECKED BY:	TLA
ADOPTED DATE:	–

WHERE DIRECTED
BY CITY ENGINEER

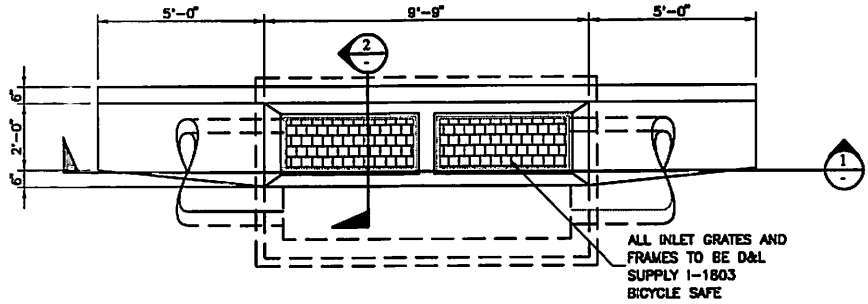

DOUBLE CATCH BASIN PLAN VIEW
SCALE: N.T.S.

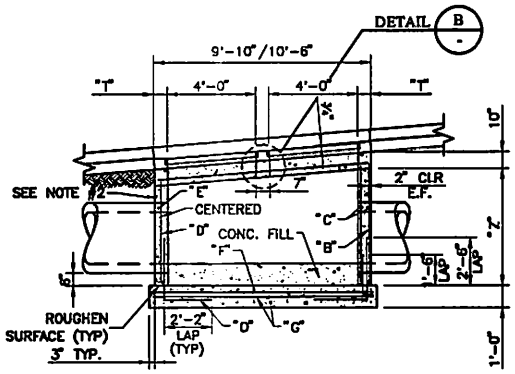

SECTION 1
SCALE: N.T.S.

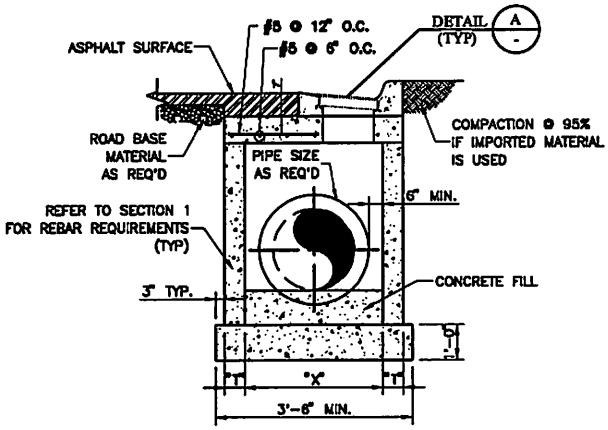

SECTION 2
SCALE: N.T.S.

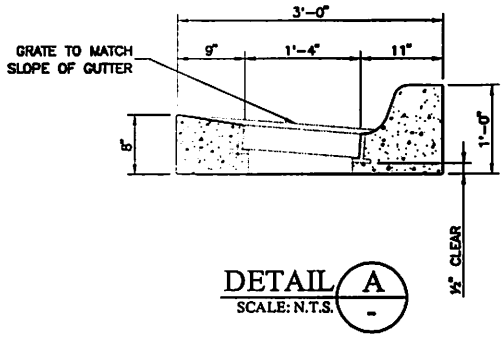

DETAIL A
SCALE: N.T.S.

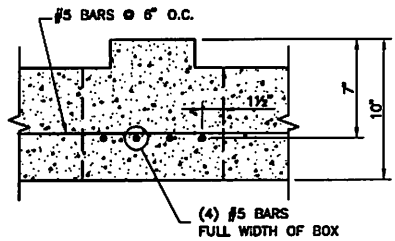

DETAIL B
SCALE: N.T.S.

NOTES:
1. REFER TO SHEET 16 FOR GENERAL NOTES.
2. REFER TO SHEET 18 FOR DIMENSION TABLE AND NOTES.

STATEMENT OF USE
THIS DOCUMENT AND ANY ILLUSTRATIONS HEREON ARE PROVIDED AS STANDARD CONSTRUCTION DETAILS WITHIN MENDON CITY. DEVIATION FROM THIS DOCUMENT REQUIRES APPROVAL OF MENDON CITY. MENDON CITY CORPORATION CAN NOT BE HELD LIABLE FOR MISUSE OR CHANGES REGARDING THIS DOCUMENT.

REVISION

NO.	DESCRIPTION	BY	APR.	DATE
1				
2				
3				
4				

JUB Engineers • Surveyors • Planners

MENDON CITY CORP.
DEVELOPMENT STANDARDS

ALTERNATE DOUBLE CATCH BASIN

STANDARD DRAWING NUMBER:	13
CAD DWG:	SHEET 13
PLOT SCALE:	1 = 96
DATE:	JAN 2001
DRAWN BY:	JDM
DESIGN BY:	ZPM
CHECKED BY:	TLA
ADOPTED DATE:	–

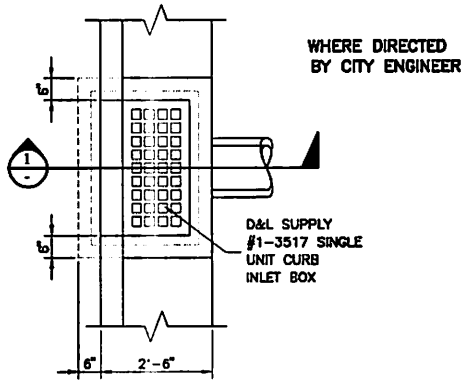

OPEN FACE CATCH BASIN PLAN

SCALE: N.T.S.

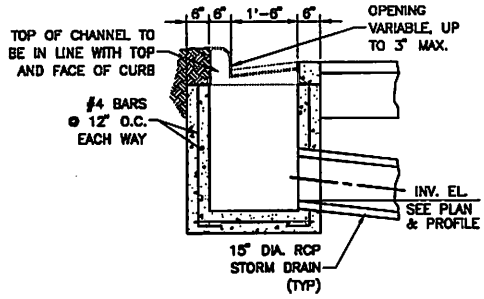

SECTION 1 / -

SCALE: N.T.S.

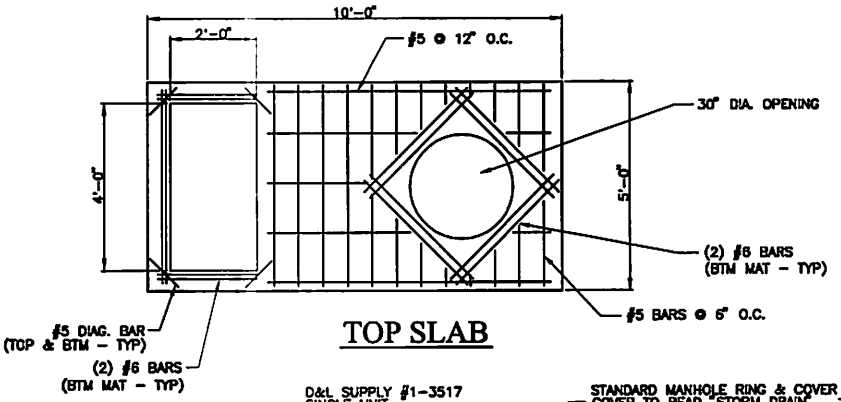

TOP SLAB

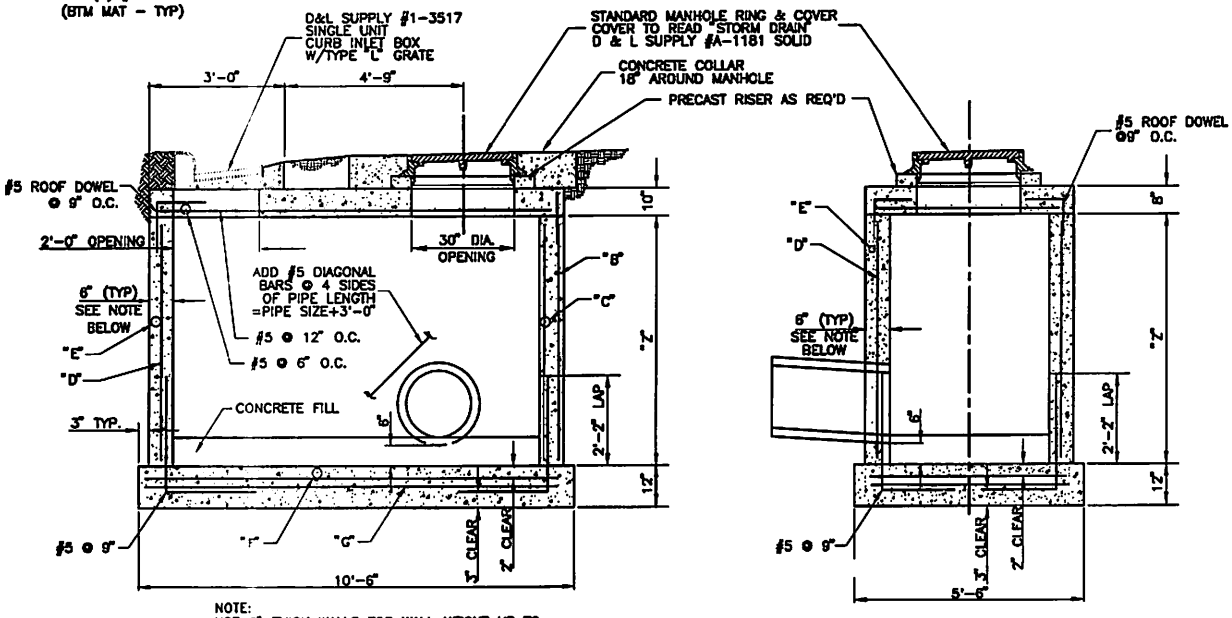

NOTE:
USE 6" THICK WALLS FOR WALL HEIGHT UP TO 5'-0". FOR WALL HEIGHT GREATER THAN 5'-0", USE 10" THICK WALLS.

COMBINATION INLET/CLEANOUT

STATEMENT OF USE

THIS DOCUMENT AND ANY ILLUSTRATIONS HEREON ARE PROVIDED AS STANDARD CONSTRUCTION DETAILS WITHIN MENDON CITY. DEVIATION FROM THIS DOCUMENT REQUIRES APPROVAL OF MENDON CITY. MENDON CITY CORPORATION CAN NOT BE HELD LIABLE FOR MISUSE OR CHANGES REGARDING THIS DOCUMENT.

REVISION

NO.	DESCRIPTION	BY	APR.	DATE
1				
2				
3				
4				

J-U-B Engineers • Surveyors • Planners

MENDON CITY CORP. DEVELOPMENT STANDARDS

ALTERNATE CATCH BASIN COMBINATION INLET/CLEANOUT

STANDARD DRAWING NUMBER:	14
CAD DWG:	SHEET 14
PLOT SCALE:	1 = 96
DATE:	JAN 2001
DRAWN BY:	JDM
DESIGN BY:	ZPM
CHECKED BY:	TIA
ADOPTED DATE:	-

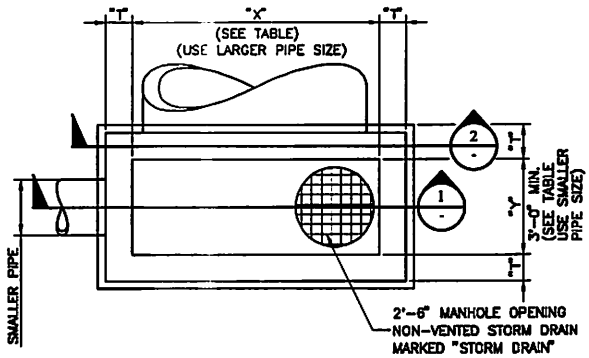

STANDARD CLEANOUT PLAN VIEW

SCALE: N.T.S. (TYPE 1)

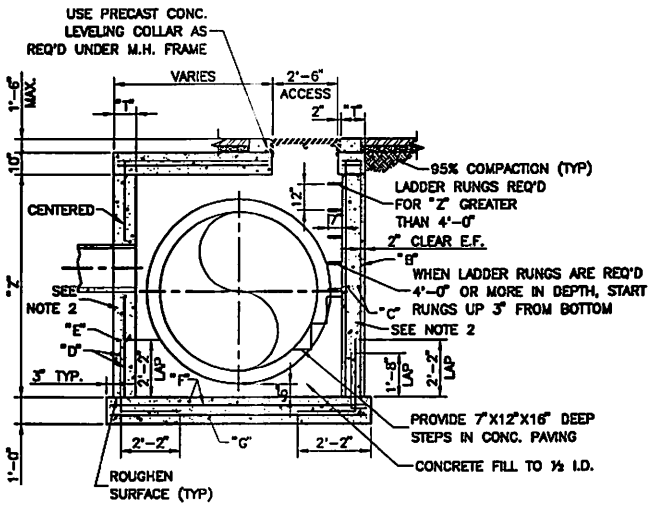

SECTION 1 / - SCALE: N.T.S.

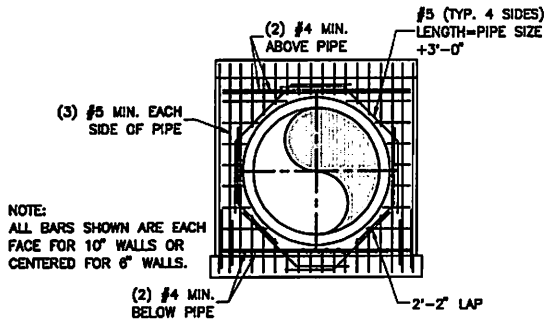

SECTION 2 / - SCALE: N.T.S.

STATEMENT OF USE

THIS DOCUMENT AND ANY ELECTRONICS HEREON ARE PROVIDED AS STANDARD CONSTRUCTION DETAILS WITHIN MENDON CITY. DEVIATION FROM THIS DOCUMENT REQUIRES APPROVAL OF MENDON CITY. MENDON CITY CORPORATION CAN NOT BE HOLD LIABLE FOR MISUSE OR CHANGES REGARDING THIS DOCUMENT.

REVISION

NO.	DESCRIPTION	BY	APR.	DATE
1				
2				
3				
4				

J-U-B Engineers • Surveyors • Planners

MENDON CITY CORP. DEVELOPMENT STANDARDS

STANDARD STORM DRAIN CLEANOUT

STANDARD DRAWING NUMBER:	15
CAD DWG:	SHEET 15
PLOT SCALE:	1 = 96
DATE:	JAN 2001
DRAWN BY:	JDM
DESIGN BY:	ZPM
CHECKED BY:	TLA
ADOPTED DATE:	-

GENERAL NOTES:

1. ALL STRUCTURAL CONCRETE SHALL DEVELOP A MINIMUM COMPRESSIVE STRENGTH OF 4,000 PSI IN 28 DAYS.
2. REINFORCEMENT STEEL SHALL BE DEFORMED BARS CONFORMING IN QUALITY TO THE REQUIREMENTS OF ASTM DESIGNATION A-615, GRADE 60, INCLUDING SUPPLEMENTARY REQUIREMENTS (S1).
3. ALL DETAILING, FABRICATION AND PLACING OF REINFORCING BARS SHALL BE IN ACCORDANCE WITH THE "MANUAL OF STANDARD PRACTICE FOR DETAILING REINFORCED CONCRETE STRUCTURES" ACI-315, LATEST EDITION.
4. TOLERANCES IN PLACING REINFORCEMENT SHALL BE:

   ±3/8 INCH FOR MEMBERS WITH D < 8 INCHES
   ±1/2 INCH FOR MEMBERS WITH D >= 8 INCHES

5. DOWELS, PIPES, WATERSTOPS AND OTHER INSTALLED MATERIALS AND ACCESSORIES SHALL BE HELD SECURELY IN POSITION WHILE CONCRETE IS BEING PLACED.
6. UNLESS OTHERWISE SHOWN, ASIDE FROM NORMAL ACCESSORIES USED TO HOLD REINFORCING BARS FIRMLY IN POSITION, THE FOLLOWING SHALL BE ADDED:
   A) IN SLABS #5 RISER BARS AT 36 INCHES O.C. MAXIMUM TO SUPPORT TOP REINFORCING BARS.
   B) IN WALLS WITH 2 CURTAINS #3 U OR Z SHAPE SPACES AT 6 FEET O.C. EACH WAY.
7. METAL CLIPS OR SUPPORTS SHALL NOT BE PLACED IN CONTACT WITH THE FORMS OR THE SUBGRADE. CONCRETE BLOCKS (OR DOBBIES) SUPPORTING BARS ON SUBGRADE SHALL BE IN SUFFICIENT NUMBERS TO SUPPORT THE BARS WITHOUT SETTLEMENT, BUT IN NO CASE SHALL SUCH SUPPORT BE CONTINUOUS.
8. DOWELS SHALL BE WIRED OR OTHERWISE HELD IN POSITION. REINFORCED BARS AND ACCESSORIES SHALL NOT BE IN CONTACT
9. THEY SHALL NOT BE SHOVED INTO FRESHLY PLACED CONCRETE. WITH ANY PIPE, PIPE FLANGE OR METAL PARTS EMBEDDED IN CONCRETE. A MINIMUM OF 2 INCHES CLEARANCE SHALL BE PROVIDED AT ALL TIMES.
10. STRUCTURES SHALL BE BACKFILLED WITH GRANULAR SOIL.
11. ALL CONSTRUCTION JOINTS SHALL BE ROUGHED AND CLEANED AND FREE OF LAITANCE.
12. STRUCTURES HAVE BEEN DESIGNED FOR THE FOLLOWING; IF CONDITIONS ARE EXCEEDED THE ENGINEER SHALL BE NOTIFIED.
    A) AASHTO HS-20 TRUCK LOAD
    B) 1'-6" MAX. SOIL ABOVE THE ROOF OF THE STRUCTURE
    C) GROUND WATER TO TOP OF STRUCTURE
    D) "AT-REST" LATERAL SOIL PRESSURE OF 60 PCF FOR DRY SOIL CONDITIONS AND 92.4 PCF WHEN GROUND WATER IS PRESENT.

DIMENSION TABLE

PIPE SIZE (In.)	USE LARGEST PIPE SIZE FOR THESE DIMENSIONS AND REBAR EXCEPT DIMENSION "Y"									
	"X" "Y"	"Z"	"T"	"A"	"B"	"C"	"D"	"E"	"F"	"G"
18	3'-0"	3'-3"	6"	#4 @ 12"	----	----	#5 @ 9"	#4 @ 12"	#4 @ 12"	#5 @ 9"
21	3'-3"	3'-6"	6"	#4 @ 12"	----	----	#5 @ 9"	#4 @ 12"	#4 @ 12"	#5 @ 9"
24	3'-6"	3'-9"	6"	#4 @ 12"	----	----	#5 @ 9"	#4 @ 12"	#4 @ 12"	#5 @ 9"
27	3'-9"	4'-0"	6"	#4 @ 12"	----	----	#5 @ 9"	#4 @ 12"	#4 @ 12"	#5 @ 9"
30	4'-2"	4'-5"	6"	#4 @ 12"	----	----	#5 @ 9"	#4 @ 12"	#4 @ 12"	#5 @ 9"
33	4'-5"	4'-8"	6"	#4 @ 12"	----	----	#5 @ 9"	#4 @ 12"	#4 @ 12"	#5 @ 9"
36	4'-8"	4'-11"	6"	#4 @ 12"	----	----	#5 @ 9"	#4 @ 12"	#4 @ 12"	#5 @ 9"
42	5'-3"	5'-6"	6"	#4 @ 12"	----	----	#5 @ 9"	#4 @ 12"	#4 @ 12"	#5 @ 9"
48	5'-10"	6'-1"	10"	#4 @ 12"	#5 @12"	#4 @ 12"	----	----	#4 @ 12"	#5 @12"
54	6'-5"	6'-8"	10"	#4 @ 12"	#5 @12"	#4 @ 12"	----	----	#4 @ 12"	#5 @12"
60	7'-0"	7'-3"	10"	#4 @ 12"	#5 @12"	#4 @ 12"	----	----	#4 @ 12"	#5 @12"
66	7'-7"	8'-10"	10"	#4 @ 12"	#5 @12"	#4 @ 12"	----	----	#4 @ 9"	#5 @12"
72	8'-2"	8'-5"	10"	#4 @ 12"	#5 @12"	#4 @ 12"	----	----	#4 @ 9"	#5 @12"

NOTES:
1. THE "H" REBAR IS BASED ON THE SMALLER PIPE. WHEN THE SMALLER PIPE IS 15" TO 36" USE #4 @6". WHEN THE SMALLER PIPE IS 42" TO 60" USE #5 @ 6". WHEN THE SMALLER PIPE IS 66" OR 72" USE #6 @ 6".
2. WALL THICKNESS IS BASED ON THE LARGEST OF THE PIPES. FOR 10" WALLS, USE 2 LAYERS OF STEEL, FOR 6" WALLS, USE A SINGLE LAYER OF STEEL.
3. WHEN "Z" IS LESS THAN 4'-0", THE VERTICAL REBAR LAP MAY BE ELIMINATED AND DOWELS EXTENDED TO THE TOP OF THE WALL.

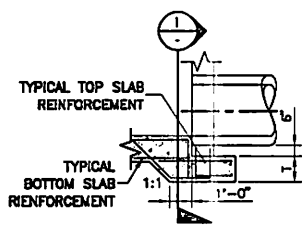

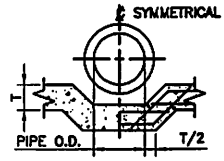

OPTIONAL FOOTING DETAIL AT WALL PIPE CONNECTION

SECTION THRU PIPE

SECTION 1 / SCALE: N.T.S.

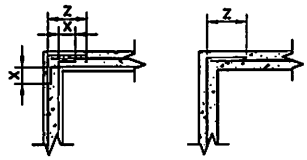

BAR SIZE	X	Z
#4	8"	1'-8"
#5	10"	2'-2"

HORIZONTAL REINFORCMENT AT WALL INTERSECTIONS

SCALE: N.T.S.

STATEMENT OF USE
THIS DOCUMENT AND ANY ELECTRONICS HEREON ARE PROVIDED AS STANDARD CONSTRUCTION DETAILS WITHIN MENDON CITY. REMOVAL FROM THIS DOCUMENT REQUIRES APPROVAL OF MENDON CITY. MENDON CITY CORPORATION CAN NOT BE HELD LIABLE FOR MISUSE OR CHANGES REGARDING THIS DOCUMENT.

REVISION

NO.	DESCRIPTION	BY	APR.	DATE
1				
2				
3				
4				

J-U-B Engineers • Surveyors • Planners

MENDON CITY CORP. DEVELOPMENT STANDARDS

STANDARD CATCH BASIN

STANDARD DRAWING NUMBER:	16
CAD DWG:	SHEET 16
PLOT SCALE:	1 = 96
DATE:	JAN 2001
DRAWN BY:	JDM
DESIGN BY:	ZPM
CHECKED BY:	TLA
ADOPTED DATE:	-

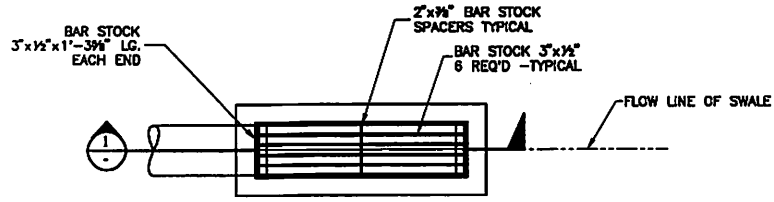

INLET PLAN

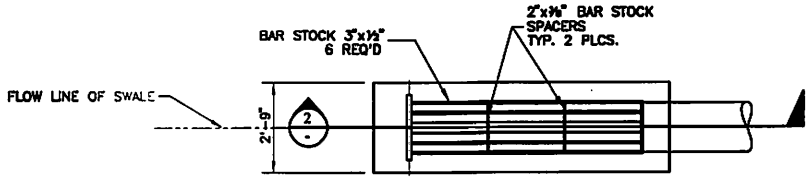

OUTLET PLAN

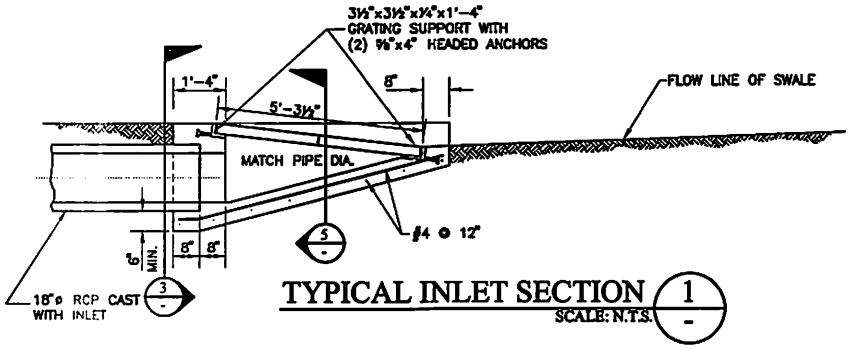

TYPICAL INLET SECTION 1
SCALE: N.T.S.

NOTE:
HOT DIP GALVANIZE GRATES
AND GRATING SUPPORTS
AFTER FABRICATION.

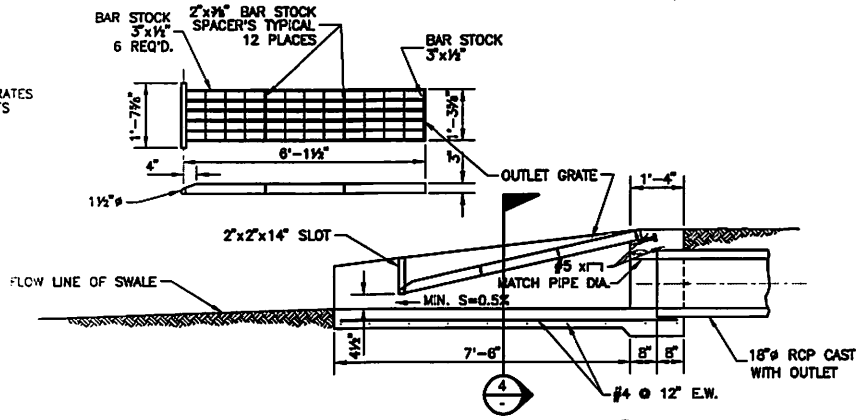

TYPICAL OUTLET SECTION 2
SCALE: N.T.S.

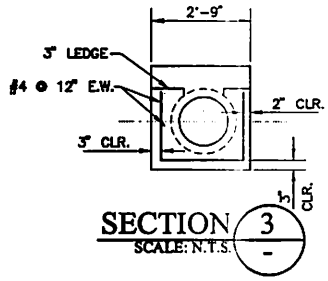

SECTION 3
SCALE: N.T.S.

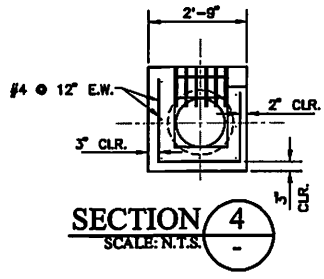

SECTION 4
SCALE: N.T.S.

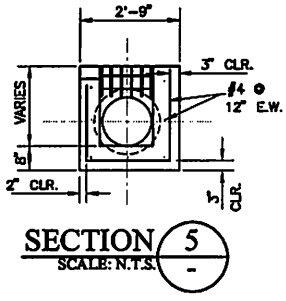

SECTION 5
SCALE: N.T.S.

STATEMENT OF USE

THIS DOCUMENT AND ANY ILLUSTRATIONS HEREON ARE PROVIDED AS STANDARD CONSTRUCTION DETAILS WITHIN MENDON CITY. DEVIATION FROM THIS DOCUMENT REQUIRES APPROVAL OF MENDON CITY. MENDON CITY CORPORATION CAN NOT BE HELD LIABLE FOR MISUSE OR CHANGES REGARDING THIS DOCUMENT.

REVISION

NO.	DESCRIPTION	BY	APR.	DATE
1				
2				
3				

J-U-B Engineers • Surveyors • Planners

MENDON CITY CORP. DEVELOPMENT STANDARDS

STANDARD INLET - OUTLET
DIPSTONE DETAILS

STANDARD DRAWING NUMBER:	17
CAD DWG:	SHEET 17
PLOT SCALE:	1 = 64
DATE:	JAN 2001
DRAWN BY:	JDM
DESIGN BY:	ZPM
CHECKED BY:	TLA
ADOPTED DATE:	--

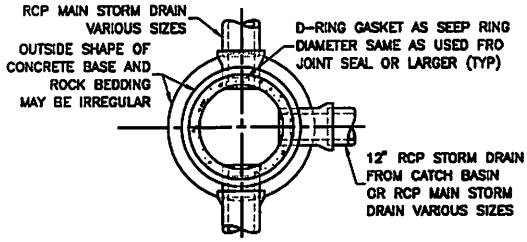

MANHOLE PLAN VIEW BELOW CONE

SCALE: N.T.S.

NOTES:
1. MANHOLE WALL AND CONE SECTION SHALL CONFORM TO ASTM C 478.
2. LIFT HOLE SHALL BE FILLED WITH GROUT.
3. IF MANHOLES ARE TOO SHALLOW FOR CONE SECTION, USE FLAT CONCRETE LID INSTEAD.

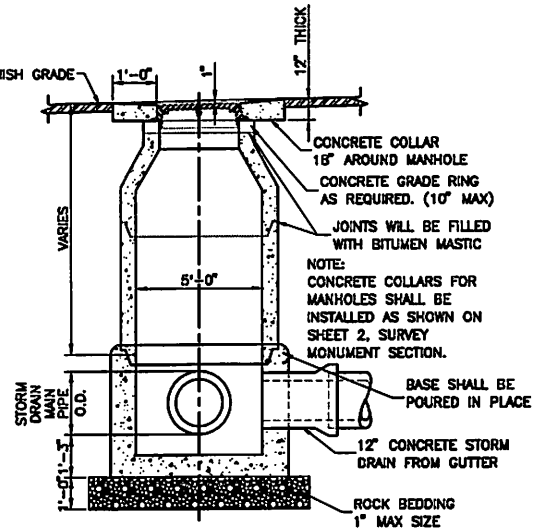

TYPICAL MANHOLE SECTION

SCALE: N.T.S.

NOTE:
CONCRETE COLLARS FOR MANHOLES SHALL BE INSTALLED AS SHOWN ON SHEET 2, SURVEY MONUMENT SECTION.

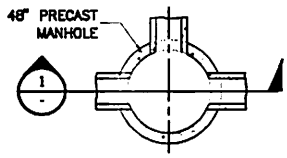

STORM DRAIN MANHOLE PLAN VIEW

SCALE: N.T.S. (FLAT LID)

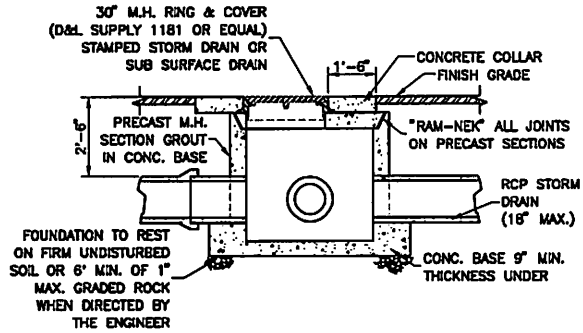

SECTION 1/-

SCALE: N.T.S.

STATEMENT OF USE

THIS DOCUMENT AND ANY ILLUSTRATIONS HEREON ARE PROVIDED AS STANDARD CONSTRUCTION DETAILS WITHIN MENDON CITY. REVISIONS FROM THIS DOCUMENT REQUIRES APPROVAL OF MENDON CITY. MENDON CITY CORPORATION CAN NOT BE HELD LIABLE FOR MISUSE OR CHANGED REVISIONS THIS DOCUMENT.

REVISION

NO.	DESCRIPTION	BY	APR.	DATE
1				
2				
3				

J-U-B Engineers • Surveyors • Planners

MENDON CITY CORP. DEVELOPMENT STANDARDS

STANDARD STORM DRAIN MANHOLES

STANDARD DRAWING NUMBER:	18
CAD DWG:	SHEET 18
PLOT SCALE:	1 = 96
DATE:	JAN 2001
DRAWN BY:	JDM
DESIGN BY:	ZPM
CHECKED BY:	TLA
ADOPTED DATE:	-

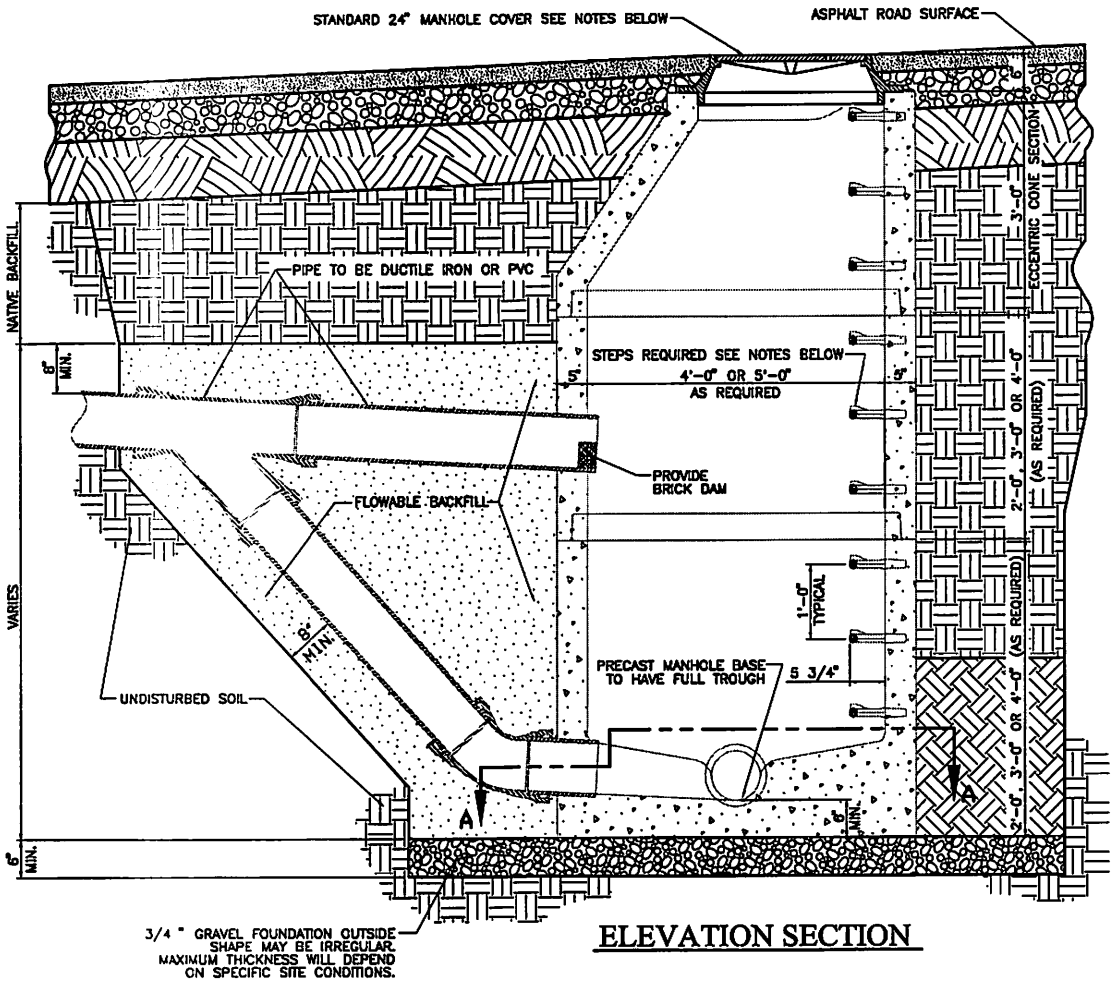

ELEVATION SECTION

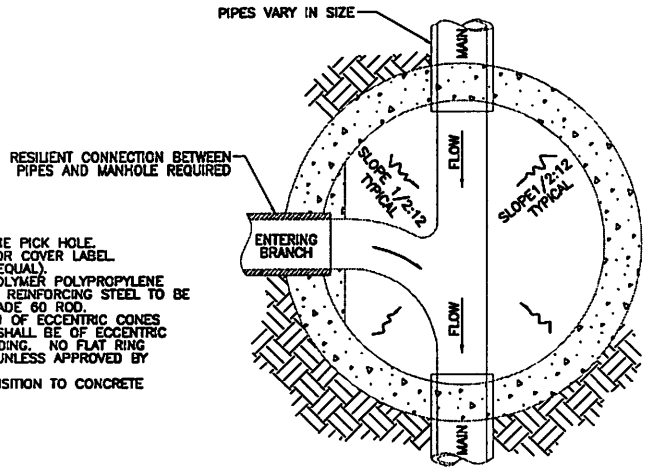

SECTION A-A

NOTES:
1. MANHOLE COVER TO CONTAIN ONE PICK HOLE. SEE SPECIFICATION DIVISION 5 FOR COVER LABEL. D&L SUPPLY P/N A-1181 (OR EQUAL).
2. STEPS SHALL BE MADE OF COPOLYMER POLYPROPYLENE CONFORMING TO ASTM D-4101. REINFORCING STEEL TO BE DEFORMED 1/2 " DIAMETER GRADE 60 ROD.
3. FLAT LIDS MAY BE USED IN LIEU OF ECCENTRIC CONES WHERE NECESSARY. FLAT LIDS SHALL BE OF ECCENTRIC DESIGN AND MEET H20 LIVE LOADING. NO FLAT RING AND COVERS WILL BE ALLOWED UNLESS APPROVED BY PUBLIC WORKS.
4. USE FERNCO COUPLING TO TRANSITION TO CONCRETE OR PVC PIPE AS APPROPRIATE.

STATEMENT OF USE
THIS DOCUMENT AND ANY ILLUSTRATIONS HEREON ARE PROVIDED AS STANDARD CONSTRUCTION DETAILS WITHIN MENDON CITY. DEVIATION FROM THIS DOCUMENT REQUIRES APPROVAL OF MENDON CITY. MENDON CITY CORPORATION CAN NOT BE HELD LIABLE FOR MISUSE OR CHANGES REGARDING THIS DOCUMENT.

REVISION

NO.	DESCRIPTION	BY	APR.	DATE
1				
2				
3				
4				

J-U-B Engineers • Surveyors • Planners

MENDON CITY CORP. DEVELOPMENT STANDARDS

TYPICAL DROP MANHOLE

STANDARD DRAWING NUMBER:	19
CAD DWG:	SHEET 19
PLOT SCALE:	1 = 96
DATE:	JAN 2001
DRAWN BY:	JDM
DESIGN BY:	ZPM
CHECKED BY:	TLA
ADOPTED DATE:	-

SEWER LATERAL NOTES:
1. CLEANOUTS ARE REQUIRED AT A MAX. OF 50'-0" SPACING ALONG LATERALS.
2. CLEANOUTS MUST BE LOCATED AT PROPERTY LINE.
3. TAPS ON EXISTING MAIN SHALL BE CORED AND ROMAC SEWER SADDLE W/ STAINLESS STEEL BANDS OR APPROVED EQUAL.
4. SANITARY SEWER LATERALS TO BE WHITE PVC, TO DIFFERENTIATE FROM GREEN LAND DRAIN LATERALS.
5. CONTRACTOR TO EXTEND SEWER LATERAL 10'-0" BEYOND PROPERTY LINE. MARK END WITH 2X4, PAINTED RED.

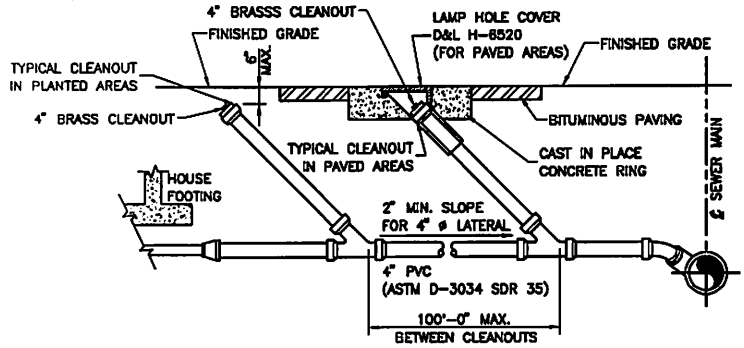

PROFILE OF TYPICAL SEWER LATERAL

SCALE: N.T.S.

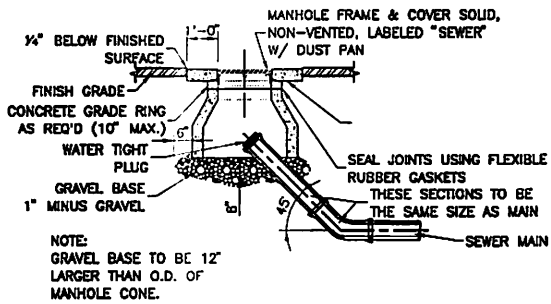

TEMPORARY SEWER MAIN CLEANOUT

SCALE: N.T.S.

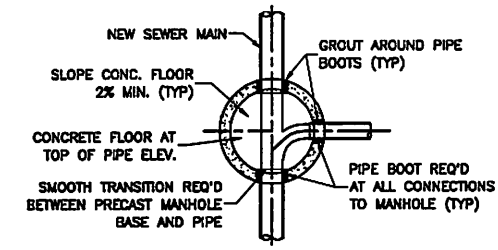

SEWER M.H. PLAN BELOW CONE

SCALE: N.T.S.

SEWER MANHOLE NOTES:
1. CONCRETE COLLARS FOR MANHOLES SHALL BE INSTALLED AS SHOWN ON SHEET 2, SURVEY MONUMENT SECTION.
2. MANHOLE WALL AND CONE SECTION SHALL CONFORM TO ASTM C-478.
3. MANHOLE SHALL BE 5'-0"ø IF SEWER MAIN IS GREATER THAN 12"ø, OR IF MORE THAN THREE SEWER MAIN PIPES CONNECT TO MANHOLE, OR IF OTHERWISE SPECIFIED ON DRAWINGS.
4. LIFT HOLES SHALL BE FILLED W/ GROUT.
5. MANHOLE CONE SHALL BE CONCENTRIC.
6. NO STEPS IN CONE OR MANHOLE WALL.
7. IF MANHOLES ARE TOO SHALLOW FOR CONE SECTION, USE FLAT CONCRETE LID INSTEAD.

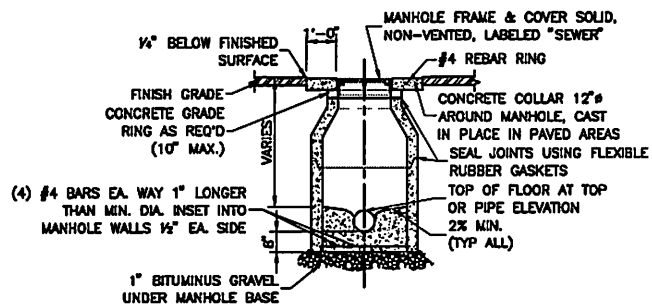

TYPICAL SEWER MANHOLE SECTION

SCALE: N.T.S.

STATEMENT OF USE
THIS DOCUMENT AND ANY ILLUSTRATIONS HEREON ARE PROVIDED AS STANDARD CONSTRUCTION DETAILS WITHIN MENDON CITY. DEVIATION FROM THIS DOCUMENT REQUIRES APPROVAL OF MENDON CITY. MENDON CITY CORPORATION CAN NOT BE HELD LIABLE FOR MISUSE OR CHANGES REGARDING THIS DOCUMENT.

REVISION

NO.	DESCRIPTION	BY	APR.	DATE
1				
2				
3				
4				

J-U-B Engineers • Surveyors • Planners

MENDON CITY CORP. DEVELOPMENT STANDARDS

TYPICAL SEWER LATERAL AND STANDARD SEWER MANHOLE

STANDARD DRAWING NUMBER:	20
CAD DWG:	SHEET 20
PLOT SCALE:	1 = 96
DATE:	JAN 2001
DRAWN BY:	JDM
DESIGN BY:	ZPM
CHECKED BY:	TLA
ADOPTED DATE:	-

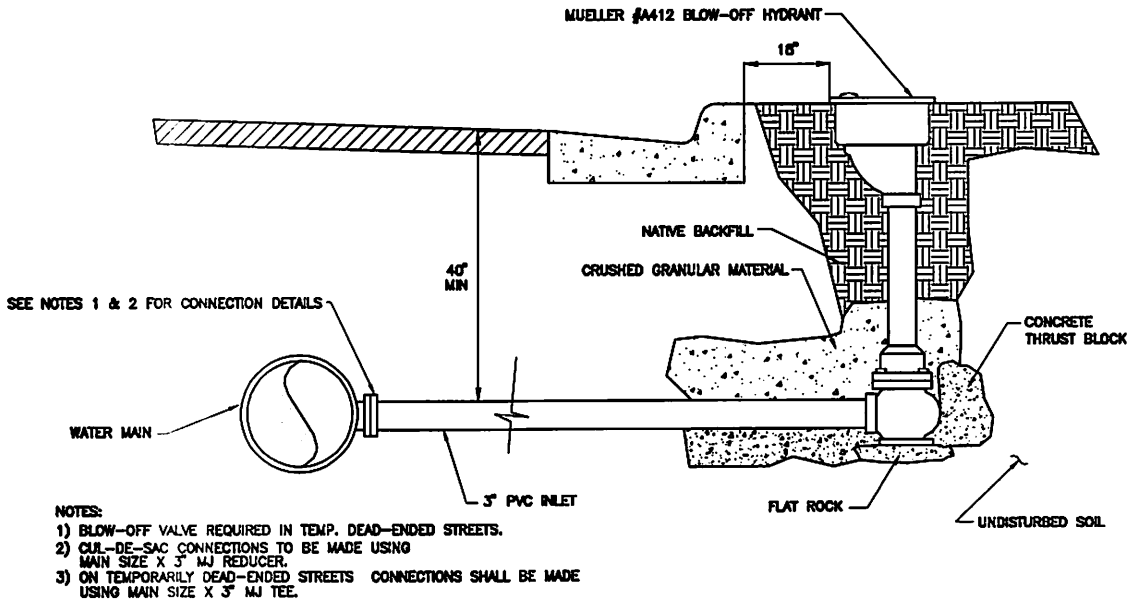

NOTES:
1) BLOW-OFF VALVE REQUIRED IN TEMP. DEAD-ENDED STREETS.
2) CUL-DE-SAC CONNECTIONS TO BE MADE USING MAIN SIZE X 3" MJ REDUCER.
3) ON TEMPORARILY DEAD-ENDED STREETS CONNECTIONS SHALL BE MADE USING MAIN SIZE X 3" MJ TEE.

TYPICAL BLOWOFF VALVE DETAIL

SCALE: N.T.S.

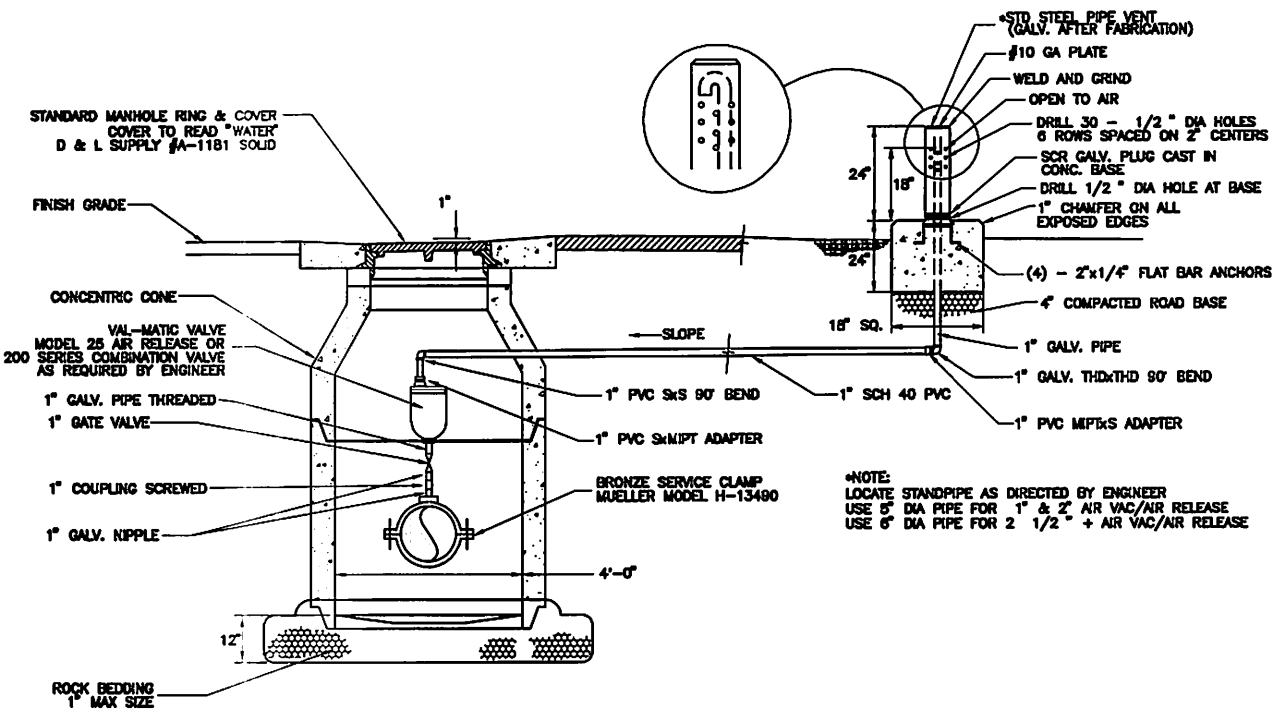

*NOTE:
LOCATE STANDPIPE AS DIRECTED BY ENGINEER
USE 5" DIA PIPE FOR 1" & 2" AIR VAC/AIR RELEASE
USE 6" DIA PIPE FOR 2 1/2" + AIR VAC/AIR RELEASE

TYPICAL AIR RELEASE VALVE MANHOLE AND SPLASH BLOCK

SCALE: N.T.S.

STATEMENT OF USE
THIS DOCUMENT AND ANY ILLUSTRATIONS HEREON ARE PROVIDED AS STANDARD CONSTRUCTION DETAILS WITHIN MENDON CITY. DEVIATION FROM THIS DOCUMENT REQUIRES APPROVAL OF MENDON CITY. MENDON CITY CORPORATION CAN NOT BE HELD LIABLE FOR MISUSE OR CHANGES REGARDING THIS DOCUMENT.

REVISION

NO.	DESCRIPTION	BY	APR.	DATE
1				
2				
3				
4				

J-U-B Engineers • Surveyors • Planners

MENDON CITY CORP. DEVELOPMENT STANDARDS

CULINARY DETAILS

STANDARD DRAWING NUMBER:	21
CAD DWG:	SHEET 21
PLOT SCALE:	1 = 96
DATE:	JAN 2001
DRAWN BY:	JDM
DESIGN BY:	ZPM
CHECKED BY:	TJA
ADOPTED DATE:	-

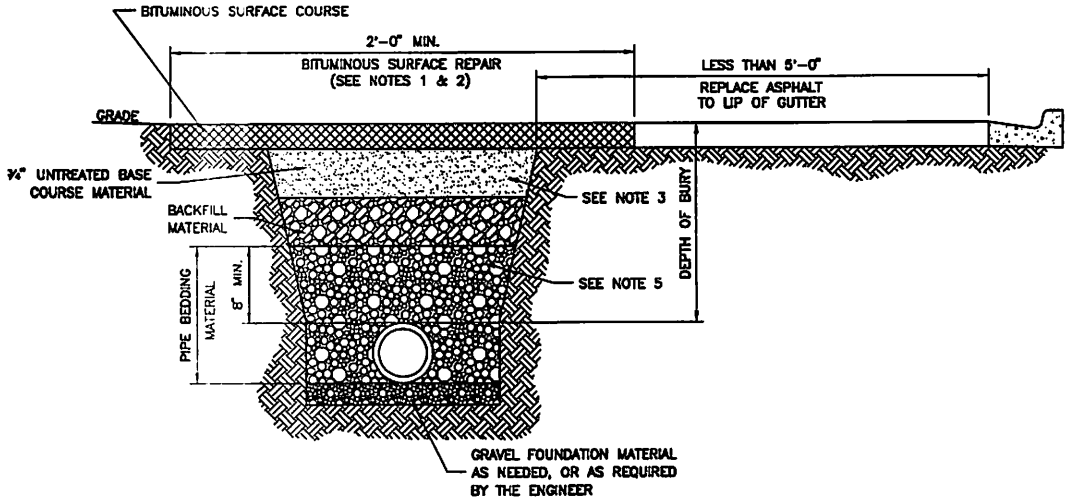

BITUMINOUS SURFACE REPAIR/TRENCH SECTION

SCALE: N.T.S.

NOTES:

1. SAW CUT BITUMINOUS ASPHALT SURFACE 6" WIDER THAN TRENCH ON EACH SIDE FOR FINAL TRENCH REPAIR WHERE BITUMINOUS SURFACE EXISTS.
2. BITUMINOUS SURFACE IS TO BE 5" OR TO MATCH EXISTING THICKNESS, WHICHEVER IS GREATER FOR STATE ROADS & 3" OR MATCH EXISTING THICKNESS, WHICHEVER IS GREATER FOR OTHER ROADS.
3. FOR TRENCH REPAIR, ¾" UNTREATED BASE COURSE MATERIAL IS TO BE 12" OR TO MATCH EXISTING THICKNESS, WHICHEVER IS GREATER. FOR NEW ROAD CONSTRUCTION, ¾" UNTREATED BASECOURSE MATERIAL IS TO BE 10" MIN. OR AS DIRECTED BY THE ENGINEER. BASE COURSE TO BE COMPACTED TO 96% ASTM D-1557.
4. SLOPE TRENCH SIDES TO MEET OSHA SAFETY REGULATIONS. (LATEST REV.)
5. BACKFILL TO BE COMPACTED TO 96% ASTM D-1557 IN ROADWAYS AND 90% IN LANDSCAPED AREAS.

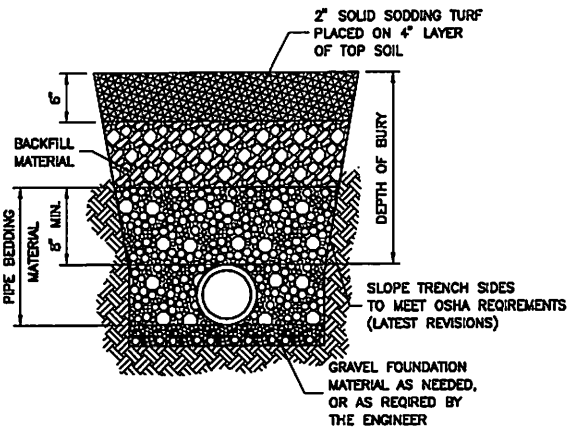

TURF SURFACE TRENCH SECTION

SCALE: N.T.S.

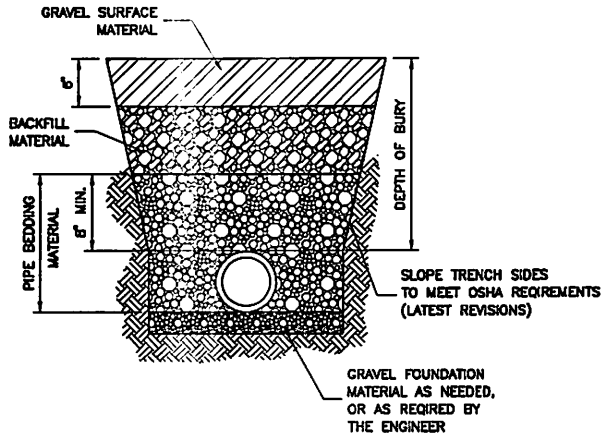

GRAVEL SURFACE TRENCH SECTION

SCALE: N.T.S.

STATEMENT OF USE

THIS DOCUMENT AND ANY ILLUSTRATIONS HEREON ARE PROVIDED AS STANDARD CONSTRUCTION DETAILS WITHIN MENDON CITY. DEVIATION FROM THIS DOCUMENT REQUIRES APPROVAL OF MENDON CITY. MENDON CITY CORPORATION CAN NOT BE HELD LIABLE FOR MISUSE OR CHANGES REGARDING THIS DOCUMENT.

REVISION

NO.	DESCRIPTION	BY	APR.	DATE
1				
2				
3				

J-U-B Engineers • Surveyors • Planners

MENDON CITY CORP. DEVELOPMENT STANDARDS

BITUMINOUS SURFACE REPAIR AND TYPICAL TRENCH SECTIONS

STANDARD DRAWING NUMBER:	22
CAD DWG:	SHEET 22
PLOT SCALE:	1 = 96
DATE:	JAN 2001
DRAWN BY:	JDM
DESIGN BY:	ZPM
CHECKED BY:	TLA
ADOPTED DATE:	-

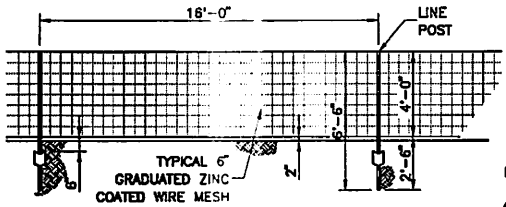

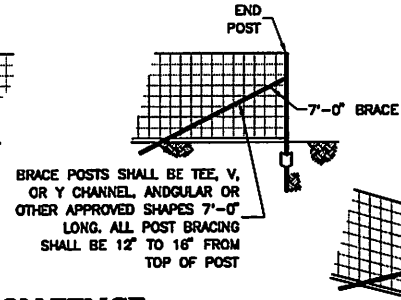

TYPE "D" CONSTRUCTION FENCE

SCALE: N.T.S.

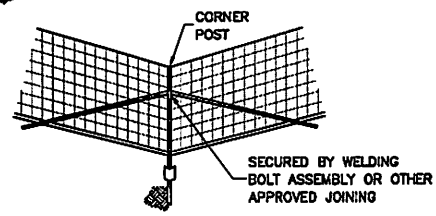

TYPICAL CORNER POST

SCALE: N.T.S.

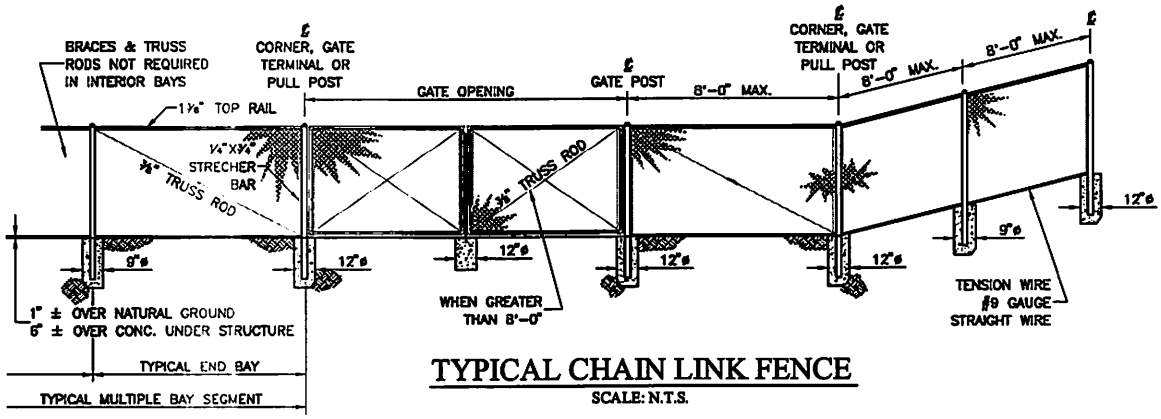

TYPICAL CHAIN LINK FENCE

SCALE: N.T.S.

NOTE:
BLOCK WALLS, WHEN REQUIRED, SHALL BE DESIGNED FOR THE SPECIFIC APPLICATION.

HEIGHT OF FABRIC	DEPTH OF POST	LENGTH OF END, CORNER OR PULL POSTS	LENGTH OF LINE POSTS	SIZE OF POSTS		
				END, CORNER AND PULL PIPE OPTION (MIN. 300'-0")	LINE POST (MIN. SIZE) PIPE OPTION	GATE POSTS
6'-0"	2'-0"+	8'-0"+	8'-0"	2 3/8" 16 GA.	1 5/8" 16 GA. 8'-0" O.C.	SEE GATE TABLE

NOTES:
1. ALL FABRIC SHALL BE 6'-0" HIGH CHAIN LINK OF 2" GALVANIZED MESH OF 11 GAUGE.
2. ALL STEEL PIPE MEMBERS SHALL CONFORM TO THE REQUIREMENTS OF A.S.T.M. DESIGNATION A-120, SCHEDULE 40, HOT DIPPED ZINC COATED STEEL PIPE.
3. ALL POSTS SHALL BE SET IN CONCRETE AND SHALL BE TOPPED WITH BALL TYPED OR OTHER APPROVED ORNAMENT.
4. ALL END, CORNER, OR PULL POST SHALL BE 8'-0" IN LENGTH WITH A MINIMUM DIAMETER OF 2 3/8". ALL LINE POSTS SHALL BE 8'-0" IN LENGTH WITH A MINIMUM DIAMETER OF 1 5/8".
5. PRIVACY SLATS SHALL BE OF FLAT, TUBULAR CONSTRUCTION MANUFACTURED FROM VIRGIN POLYETHYLENE CONTAINING AN ULTRAVIOLET INHIBITOR. THE SLATS SHALL BE RETAINED BY A RETAINING CHANNEL AT THE BOTTOM OF THE FENCE FABRIC.

GATES			
GATE POSTS AND GATE FRAMES			
HEIGHT	GATE OPENING	GATE POST SCH. 40	GATE FRAME 16 GA.
6 FEET	SINGLE TO 4'-0" OR DOUBLE TO 8'-0"	2 3/8"	1 5/8"
	SINGLE OVER 4'-0" TO 12'-0" OR DOUBLE OVER 8'-0" TO 24'-0"	2 7/8"	1 5/8"
	SINGLE OVER 12'-0" TO 18'-0" OR DOUBLE OVER 24'-0" TO 36'-0"	4"	1 5/8"
	SINGLE OVER 18'-0" OR DOUBLE OVER 36'-0"	6 5/8"	1 7/8"

STATEMENT OF USE
THIS DOCUMENT AND ANY ILLUSTRATIONS HEREON ARE PROVIDED AS STANDARD CONSTRUCTION DETAILS WITHIN MENDON CITY. DEVIATION FROM THIS DOCUMENT REQUIRES APPROVAL OF MENDON CITY. MENDON CITY CORPORATION CAN NOT BE HELD LIABLE FOR MISUSE OR CHANGES REGARDING THIS DOCUMENT.

REVISION

NO.	DESCRIPTION	BY	APR.	DATE
1				
2				
3				

J-U-B Engineers • Surveyors • Planners

MENDON CITY CORP. DEVELOPMENT STANDARDS

FENCING DETAILS

STANDARD DRAWING NUMBER:	23
CAD DWG:	SHEET 23
PLOT SCALE:	1 = 96
DATE:	JAN 2001
DRAWN BY:	JDM
DESIGN BY:	ZPM
CHECKED BY:	TLA
ADOPTED DATE:	—